Bang & Olufsen

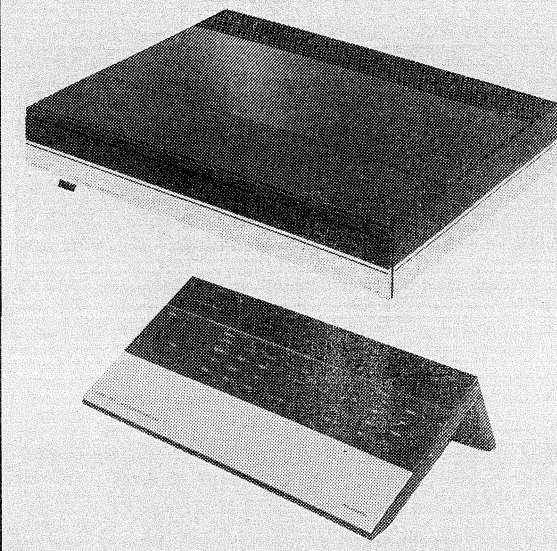

Beomaster 6500

Type 2336, 2337, 2338, 2339, 2340

Master Control Panel

Type 1551

SERVICEANVISNING
SERVICE MANUAL

INDHOLD

Moduloversigt 1
Tekniske specifikationer 1
Diagrammer 2
Elektrisk stykliste 3
Mekanisk stykliste 4
Kontrol, justeringer 5
Adskillelse 6
Reparationstips 7
Isolationstest 8
Slutafprøvning 9

CONTENTS

Survey of modules 1
Technical specifications 1
Circuit diagrams 2
List of electrical parts 3
List of mechanical parts 4
Control, adjustments 5
Dismantling 6
Repair hints 7
Insulation test 8
Final test 9

1	HF	diagr. A page 2-2	9	Display diagr. C page 2-5
2	Output and Power Supply	diagr. B page 2-4	11	Master Control, keyboard diagr. E page 2-6
3	Preamplifier	diagr. B page 2-4	12	Master Control, Mircocomputer diagr. E page 2-6
4	Microcomputer	diagr. C page 2-5	13	Master Control, IR-left diagr. E page 2-6
5	Speaker sockets	diagr. B page 2-4	14	Master Control, IR-right diagr. E page 2-6
6	Fan regulation	diagr. B page 2-4	15	Master Control, Display diagr. E page 2-6
7	Relay	diagr. B page 2-4	17	Tuner – FM diagr. ??? page 1-7

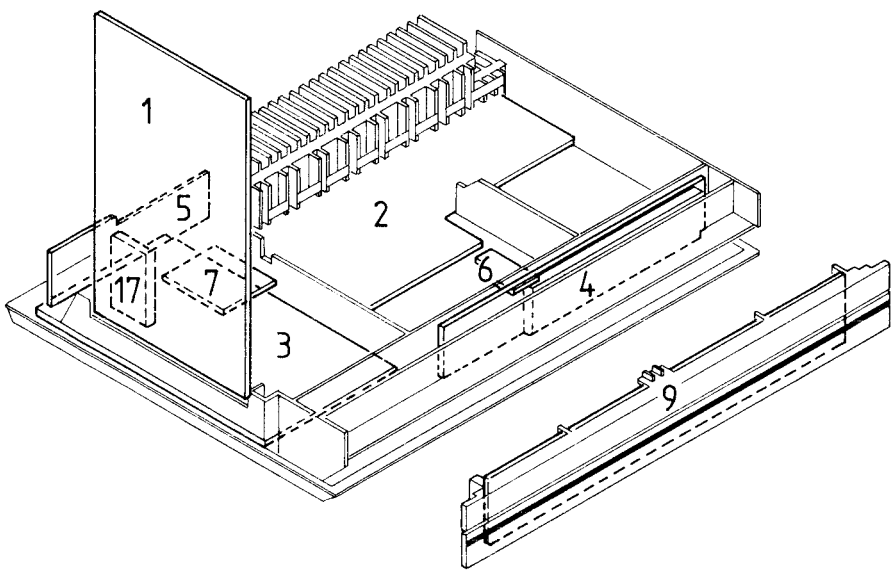

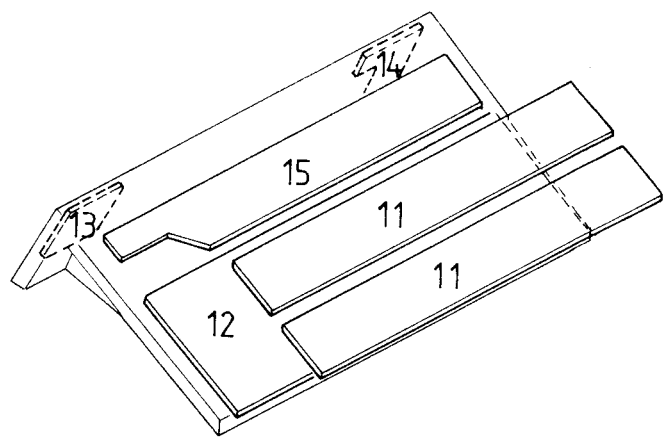

Bang & Olufsen

TECHNICAL SPECIFICATIONS

Beomaster 6500	Type 2336, 2337, 2338, 2339, 2340
	Master Control Panel 6500, two-way
	Beolink 7000, two-way
	Beolink 1000, one-way
Long-term max. output power IEC	2 x 110 watts/8 ohms
Total harmonic distortion IHF	<0,09%/50 watts 20-20,000 Hz
Dynamic headroom	1.5 db/8 ohms
Intermodulation IHF	<0.1%
Input sensitivity/impedance:	
Phono	30 mV/100 kohms
Tape - AUX	30 mV/100 kohms
CD player	20 mV/100 kohms
Line	25 mV/100 kohms
Response vs frequency:	
Phono	20-20,000 Hz ±1.5 dB
Tape	20-20,000 Hz ±1.5 dB
Wideband damping factor	50
Signal-to-noise ratio:	
Phono A-weighted, 1 W IHF	>78 dB
Tape A-weighted, 1 W IHF	>80 dB
Tape A-weighted, 50 W output	>97 dB
Channel separation 10,000 Hz	>50 dB
Output:	
Tape	500 mV/1 kohms
Line	500 mV/1 kohms
External power amplifier	1 V/1 kohms
Headphones	Max. 10 V/470 ohms
Bass control at 40 Hz	±10 dB
Treble control at 12,500 Hz	±8 dB
FM tuner section:	
FM range	76-90 MHz (Type 2339)
	87.5-108 MHz (Type 2336, 2337, 2338, 2340
FM aerial impedance	75 and 240 ohms
Usable sensitivity mono	14 dBf-1.4 µV/75 ohms
Usable sensitivity stereo	19 dBf-2.5 µVV/75 ohms
50 dB quiting sensitivity mono	19 dBf-2.5 µV/75 ohms
50 dB quiting sensitivity stereo	40 dBf-28 µV/75 ohms
Signal-to-noise ratio 65 dBf mono	75 dB
Signal-to-noise ratio 65 dBf stereo	70 dB
Frequency response	20-15,000 Hz ±1 db
Distortion at 65 dBf mono	0.16%
Distortion at 65 dBf stereo	0.2%
Intermodulation mono	0.1%
Intermodulation stereo	0.1%
Capture ratio	1.7 dB
Adjacent channel selectivity	10 dB
Alternate channel selectivity	70 dB
Spurious response	100 dB
Image response ratio	80 dB
IF response ratio	120 dB

AM suppression	57 dB
Stereo channel separation	45 dB
Subcarrier product rejection	70 dB
AM tuner section:	
LW range	150-350 kHz (Type 2336, 2337)
MW range	520-1610 kHz (Type 2336, 2337, 2338, 2339, 2340)
LW sensitivity 20 dB S/N ratio	80 µV
MW sensitivity 20 dB S/N ratio	60 µV
Connections:	
Audio Link	CD, Tape 1, Tape 2, PH (RIAA in Beogram 6500)
Audio Aux Link	Beovision, 7 pin
Power Link	Beolab speakers, 2 sockets 8-pin
Speaker Link	Beovox speakers, 2 sockets 4-pin
Master Control Link	2 sockets 3-pin
Power supply	Type 2336 220 V
	Type 2337 240 V
	Type 2338 120 V
	Type 2339 100 V
	Type 2340 240 V
Power frequency	50-60 Hz
Power consumption	Max. 225 watts
Dimensions W x H x D	42 x 7.5 x 32.5
Weight	8.5 kg
	18.8 lbs
Installationskit:	
RIAA amplifier	8001245

Subject to change without notice

Tilslutning af nettransformer/ Connection of Mains Transformer/

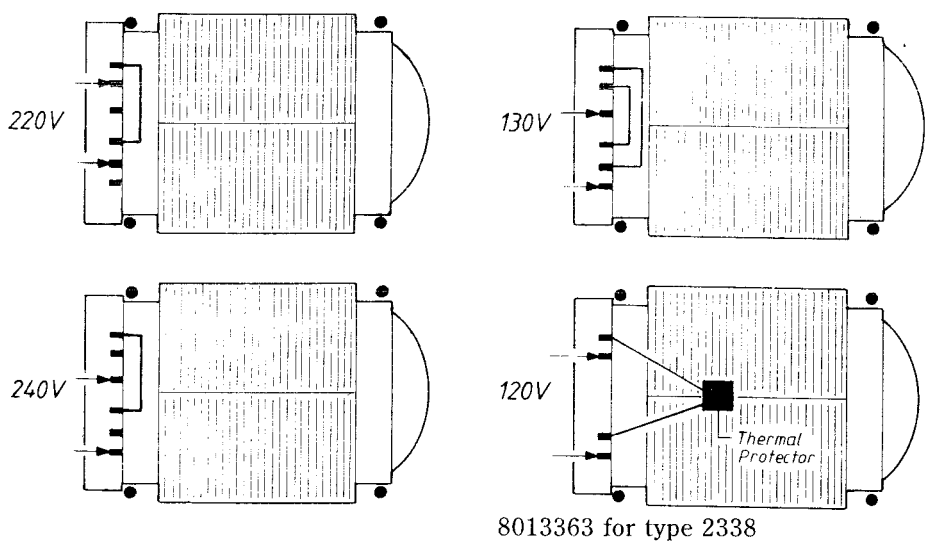

8013363 for type 2338

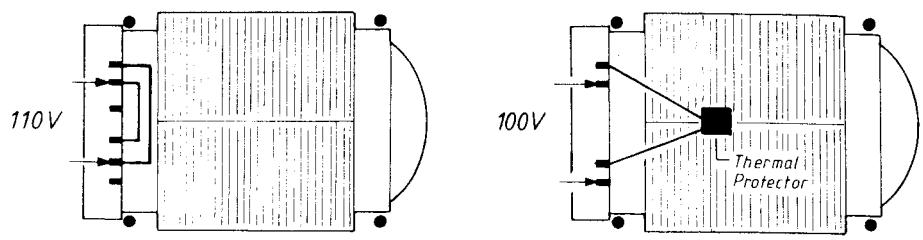

8013364 for type 2339

Options:

En Beomaster i et Beolinksystem

Options eller situationer beskriver hvordan både audio- og videoprodukterne i et Beolinksystem skal programmeres i den valgte stilling.

Option 1 (Situation 1):

Et audio- og et videosystem placeres i samme rum, så signalerne fra Beolink terminalen kan opfanges af begge systemer samtidigt.

Option 2:

Audio- og videosystemet er placeret i hver sit rum, så signalerne fra Beolink terminalen kun kan opfanges af ét system ad gangen.

Beomaster 6500 i Master Control Link 2-systemet:

Option 3:

Anvendes når der er to audiokilder i samme rum (f.eks.: en MCL2-enhed og en Beomaster 6500).

Option 4:

Anvendes når der er to audio- og en videokilde i samme rum (f.eks.: MCL2, Beomaster og Beovision).

Option 0:

Sætter IR-føler ud af funktion, hvilket kan udnyttes f.eks. i butiksvinduer eller ved udstillinger. Der kan dog stadig vælges ny option med Beolink terminalen.

Programmering:

Options programmeres med Beolink terminalen, med Beomaster 6500 i standby:

Tast:	SOUND, Option nr. STORE
Display viser:	Option nr.

Beomaster 6500 er fra fabrikken programmeret til option 1.

Stikdåserne Line in/out og AUX/TV:

Line in/out anvendes ved tilslutning af en equalizer. Husk kortslutningsprop (bestillingsnr. 7220265) når equalizer ikke er tilsluttet.
AUX/TV anvendes ved tilslutning af et Beolink-kompatibelt fjernsyn eller f.eks. Bang & Olufsen båndoptager.

Options:

A Beomaster in a Beolink System

Options or situations describe how both the audio and video products in a Beolink system are programmed in the chosen setting.

Option 1 (Situation 1):

An audio and a video system are placed in the same room so the signals from Beolink terminal can be received by both systems at the same time.

Option 2:

The audio and video systems are placed in separate rooms so the signals from Beolink terminal can only be received by one system at a time.

Beomaster 6500 in the Master Control Link 2 system:

Option 3:

Is used when there are two audio sources in the same room (e.g. an MCL2 unit and a Beomaster 6500).

Option 4:

Is used when there are two audio sources and one video source in the same room (e.g. MCL2, Beomaster and Beovision).

Option 0:

Puts the IR sensor out of operation; this can be used in shop windows or at exhibitions for example. However, new options can still be selected with Beolink terminalen.

Programming:

Options are programmed with Beolink terminal, with Beomaster 6500 in standby:

Key:	SOUND, Option no. STORE
Display shows	Option no.

Beomaster 6500 is programmed at the factory to option 1.

The Line in/out and AUX/TV sockets:

Line in/out is used for connecting an equalizer. Remember short-circuiting fuse (order no. 7220265) when the equalizer is not connected.
AUX/TV is used for connecting a Beolink-compatible television or e.g. Bang & Olufsen cassette recorder.

DIAGRAMFORKLARING

På diagrammerne er der angivet typenumre på transistorer og IC'er. Hvis positionsnummeret er efterfulgt af en stjerne, skal reservedelsnummeret altid benyttes, da denne komponent er specielt udvalgt, f.eks. TR102*.

Positionsnummeret for udgangsforstærkerens venstre kanal er angivet i paranteser i diagrammet for højre kanal.

Komponenttryk og koordinatsystem

De største printplader er forsynet med komponenttryk og et koordinatsystem på både print- og komponentside.
På diagrammerne er enhver komponent forsynet med et koordinatnummer. Dette fortæller i hvilket koordinat på printpladen, komponenten er placeret. Koordinatnumrene er angivet med mindre skrifttype end positionsnumrene.

Styrekredsløb

I visse styrekredsløb er den aktive tilstand angivet med en funktions- eller bogstavsangivelse. Denne kan eksempelvis være $\overline{\text{ST.BY.}}$ = »low« i stand-by-stilling eller ST.BY. = »high« i stand-by-stilling.

Ledningsforbindelser

Ledningsforbindelserne på diagrammerne er samlet i »bundter«. De enkelte ledninger er forsynet med en af følgende koder:

INTERN FORBINDELSE PÅ EN DIAGRAMSIDE

Interne forbindelser på en diagramside angives med et tal. Knækket på ledningen viser, i hvilken retning, den anden ende af ledningen findes.

FORBINDELSE TIL EN ANDEN DIAGRAMSIDE

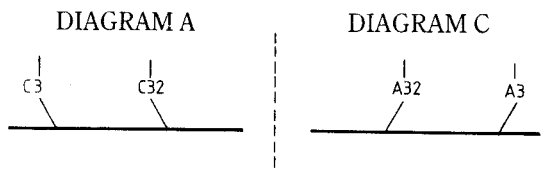

Forbindelsen til en anden diagramside angives med et tal samt et bogstav for det diagram, forbindelsen går til.

EXPLANATION OF DIAGRAM

Type numbers of transistors and ICs are indicated on the diagrams.
If the position number is followed by an asterisk the spare part number must always be used because the component in question has been specially selected, e.g. TR102*.

The position number for the left channel of the output amplifier are stated in brackets in the diagram for right channel.

Component print and coordinate system

The largest PCBs have component prints and a coordinate system on both the print and the component side.
On the diagrams every component has a coordinate number. This indicates in which coordinate on the PCB the component is situated. The coordinate numbers are written in smaller print types than the position numbers.

Control Circuit

In certain control circuits the active mode is indicated by a function term or by an abbreviation. This may be e.g. $\overline{\text{ST.BY.}}$ = low in the stand-by mode or ST.BY. = high in the stand-by mode.

Wiring Connections

The wiring connections on the diagrams are assembled in 'bundles'. The individual wires are provided with one of the following codes:

INTERNAL CONNECTION ON ONE DIAGRAM PAGE

Internal connections on a diagram page are indicated by a number. The bend of the wire indicates in which direction the other end of the wire is found.

CONNECTION TO ANOTHER DIAGRAM PAGE

A connection to another diagram page is indicated by a number as well as by a letter of the diagram to which the connection leads.

Forsyningsspændinger

Alle forsyningsspændinger i diagrammerne er angivet med en pil og en spændingsangivelse.

Eksempel:
Ved siden af spændingsangivelsen står der f.eks. 7 CON. Dette betyder, at den pågældende forsyningsspænding går til 7 steder på den pågældende diagramside (7 CON. = 7 connections).

Supply Voltages

All supply voltages in the diagrams are indicated by an arrow and a voltage indication.

Example:
"7 CON.". This means that the supply voltage in question goes to 7 different places on the diagram page in question (7 CON. = 7 connections).

SYMBOL FOR SIKKERHEDSKOMPONENTER

SYMBOL OF SAFETY COMPONENTS

Ved udskiftning af komponenter med dette symbol skal der anvendes komponenter med samme reservedelsnummer. Den nye komponent skal monteres på samme måde som den udskiftede.

When replacing components with this symbol, components with identical part numbers must be used. The new component must be mounted in the same way as the one replaced.

MÅLEBETINGELSER

Alle DC-spændinger er målt i forhold til stel med et voltmeter med en indgangsimpedans på 10 Mohm.

DC-spændingerne er opgivet i volt (V), f.eks. 0,7 V.

Alle oscillogrammer og AC-spændinger er målt i forhold til stel med et oscilloskop eller et voltmeter med en indgangsmodstand på 1 Mohm.

AC-spændingerne er opgivet i millivolt (mV), f.eks. 660 mV.

MEASURING CONDITIONS

All DC voltages have been measured in relation to ground with a voltmeter with an input impedance of 10 Mohms.

The DC voltages are stated in volts (V), e.g. 0.7 V.

All oscillograms and AC voltages have been measured in relation to ground with an oscilloscope or a voltmeter with an input resistance of 1 Mohm.

AC voltages are stated in millivolts (mV), e.g. 660 mV.

Type 2338 Explanation of the fuse symbols used in the set.
Explanation de symboles du fusible utilisés dans l'appareil

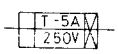

Replace with same type 5 ampere 250 volts slow acting fuse.
Remplacer par un fusible de meme type retardè et de 5 amperes 250 volts.

ADVARSEL VED LITHIUM-BATTERIER

Kortslutning og overopladning af visse typer lithium-batterier kan medføre en voldsom eksplosion.

Ved udskiftning af lithium-batteriet i dette apparat må der kun anvendes et batteri af det fabrikat og den type, der er angivet i denne serviceanvisning (se side 4-5).

Batteriet skal monteres nøjagtigt som det originale batteri.

WARNING LITHIUM BATTERIES

Short-circuit and overcharging of some types of lithium batteries may result in a violent explosion.

When replacing the lithium battery in this set, use only batteries of the make and type mentioned in this service manual (see page 4-5).

Fit the battery exactly like the old one.

FM TUNER

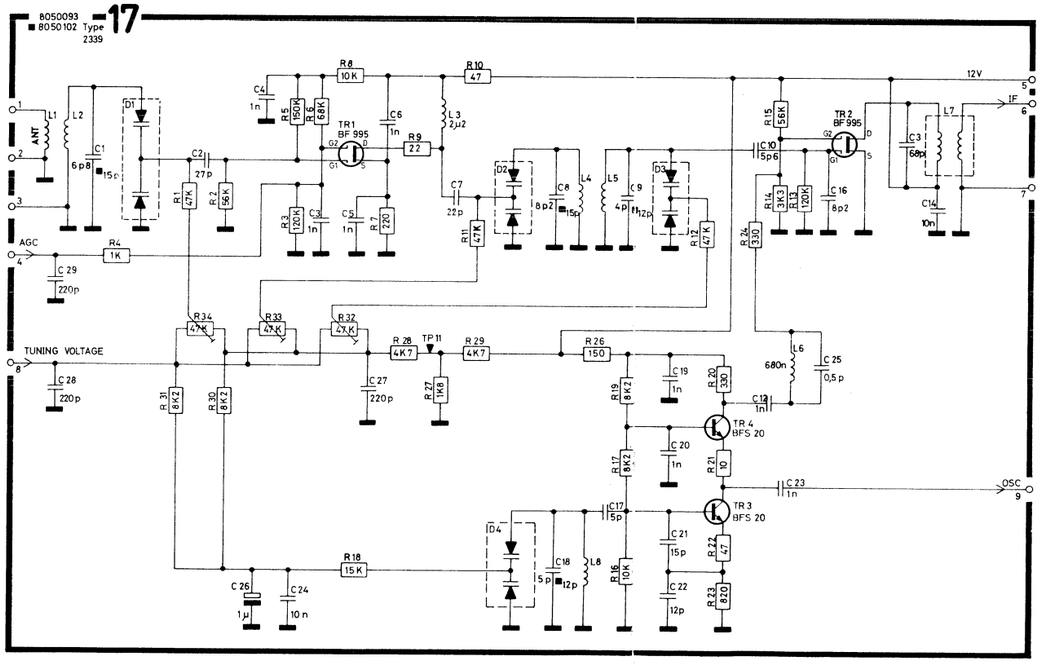

The FM TUNER is a single unit.
With failure in this unit we recommend replacing the Whole unit.
However the part nos. of semi-conductors are in the lidt of semi-conductors.

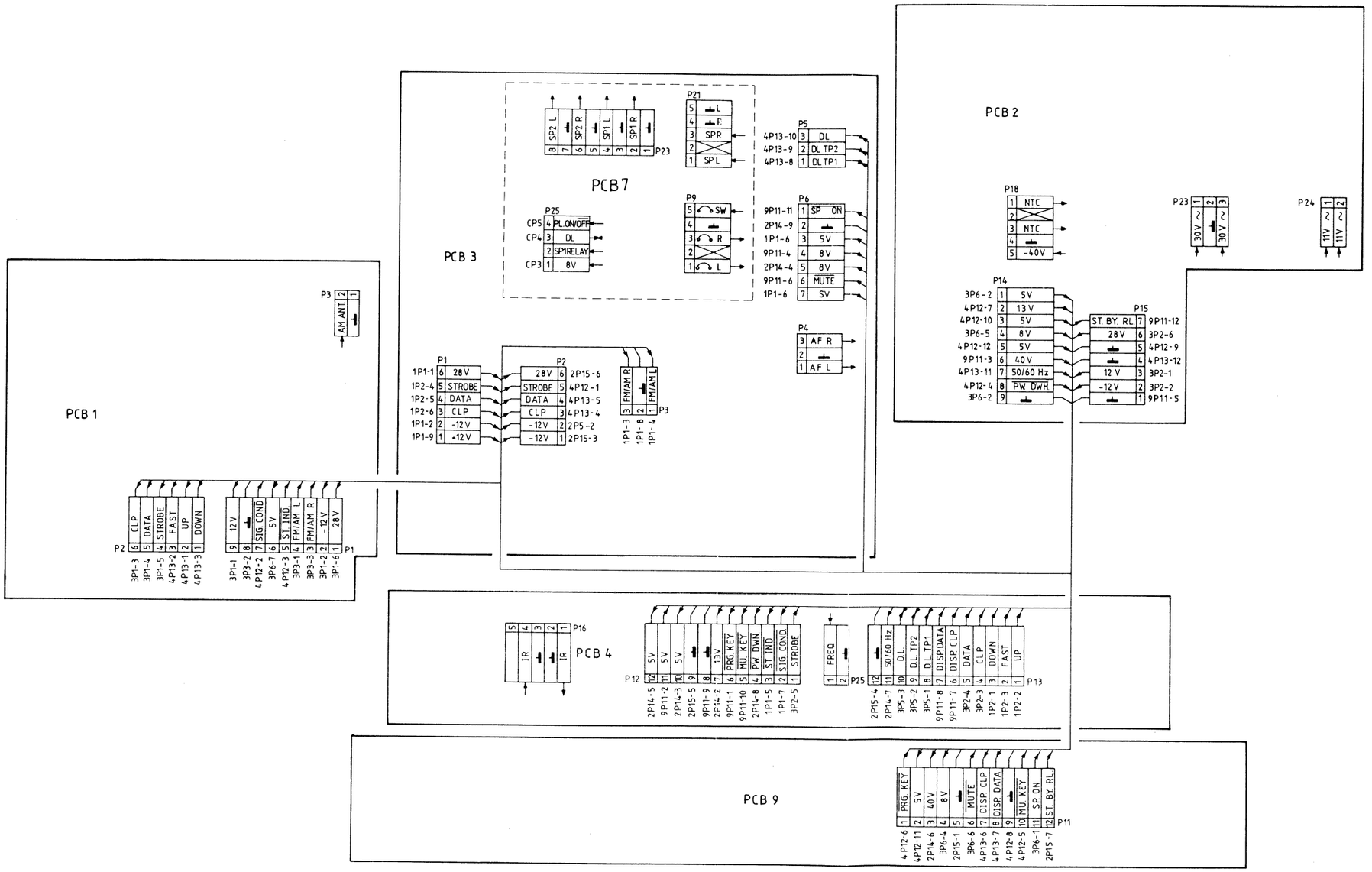
PCB 1
PCB 2
PCB 3
PCB 4
PCB 7
PCB 9
P1
P2
P3
P4
P5
P6
P9
P11
P12
P13
P14
P15
P16
P18
P21
P23
P24
P25
AM ANT.
ST. BY. RL.
PRG. KEY
MUTE
DISP. CLP
DISP. DATA
MU. KEY
SP. ON
ST. BY. RL.
FREQ
50/60 Hz
PW. DWN
STROBE
DATA
CLP
-12V
+12V
28V
SIG. COND
5V
ST. IND.
FM/AM R
FM/AM L
FAST
UP
DOWN
NTC
-40V
13V
40V
8V
SP. ON
DL
DL TP2
DL TP1
SP. ON
MUTE
SW
R
L
SP1 L
SP1 R
SP2 L
SP2 R
SPR
SP L
AF R
AF L
PL.ON/OFF
SP1RELAY
30V
11V
IR
DL TP2
DL TP1
DISP. DATA
DISP. CLP
DATA
CLP
DOWN
FAST
UP
PRG. KEY
MU. KEY
PW. DWN
ST. IND.
SIG. COND.
STROBE
FM/AM R
FM/AM L

DIAGRAM A AM-FM, TUNER, IF, STEREO DECODER (Type 2338, 2339, 2340)

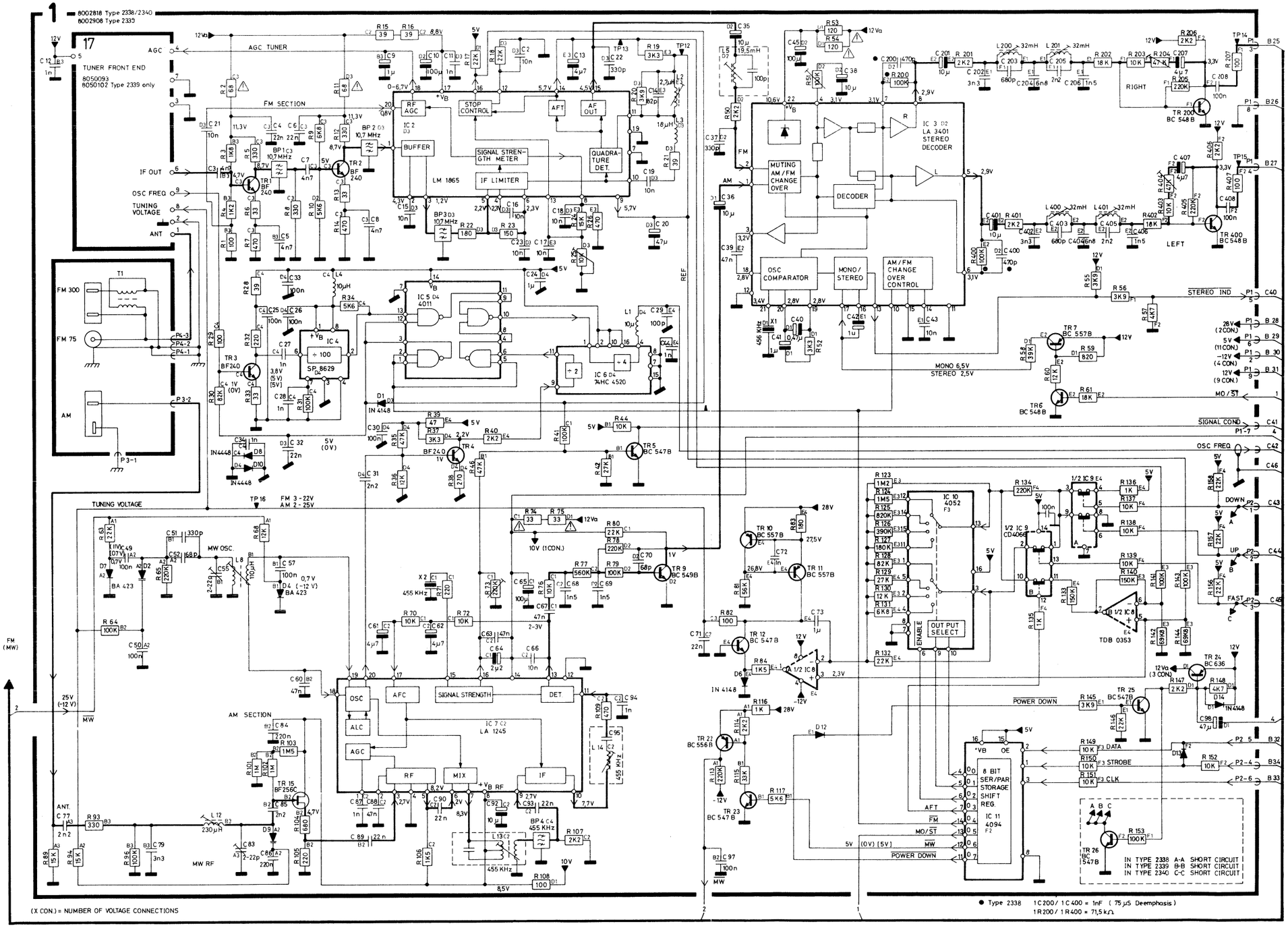

DIAGRAM A AM-FM, TUNER, IF, STEREO DECODER (Type 2336, 2337)

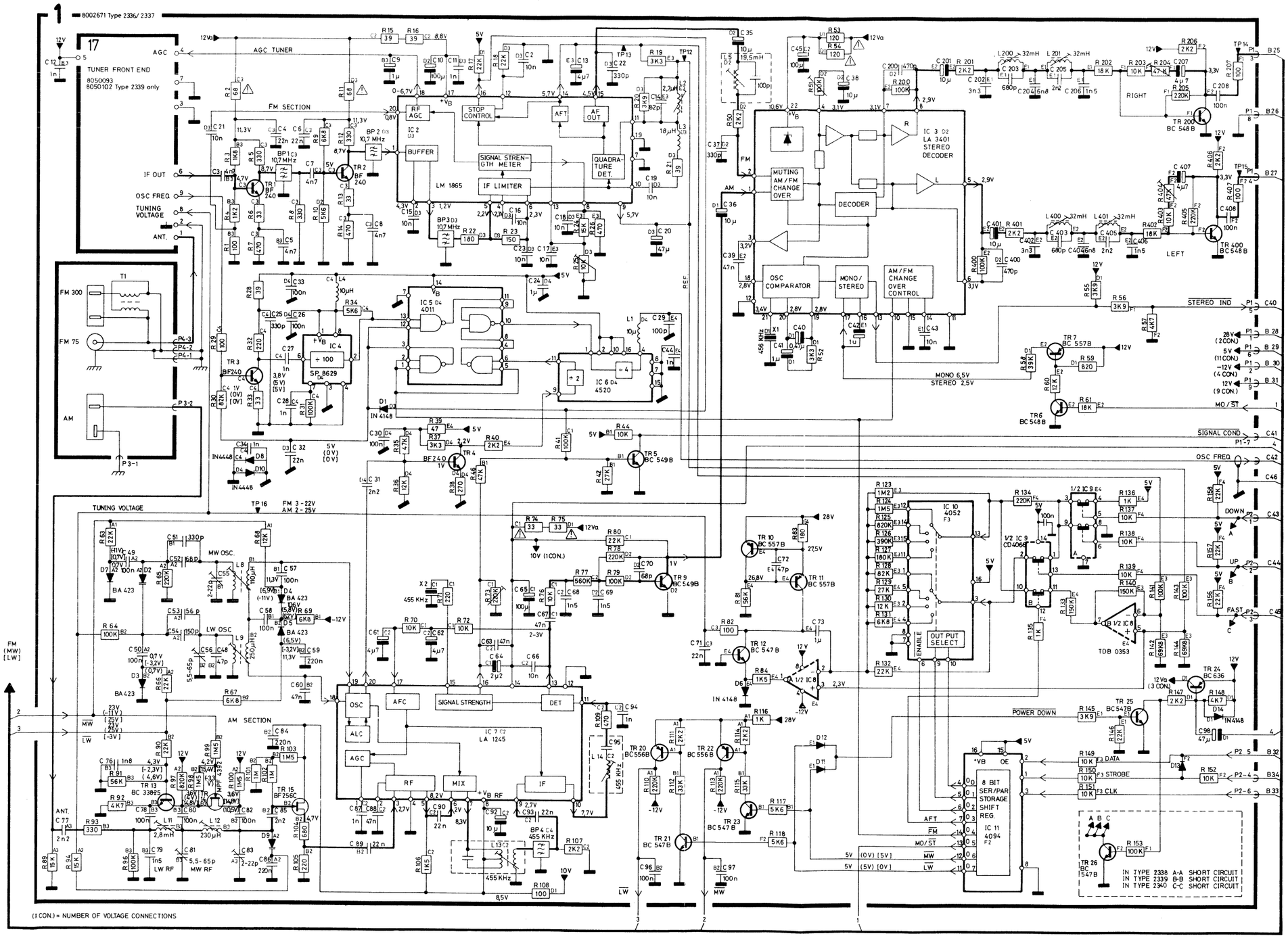

DIAGRAM B RIAA AMPL., INPUT SELECT, VOLUME AND TONE CONTROL, OUTPUT AMPL., POWER SUPPLY

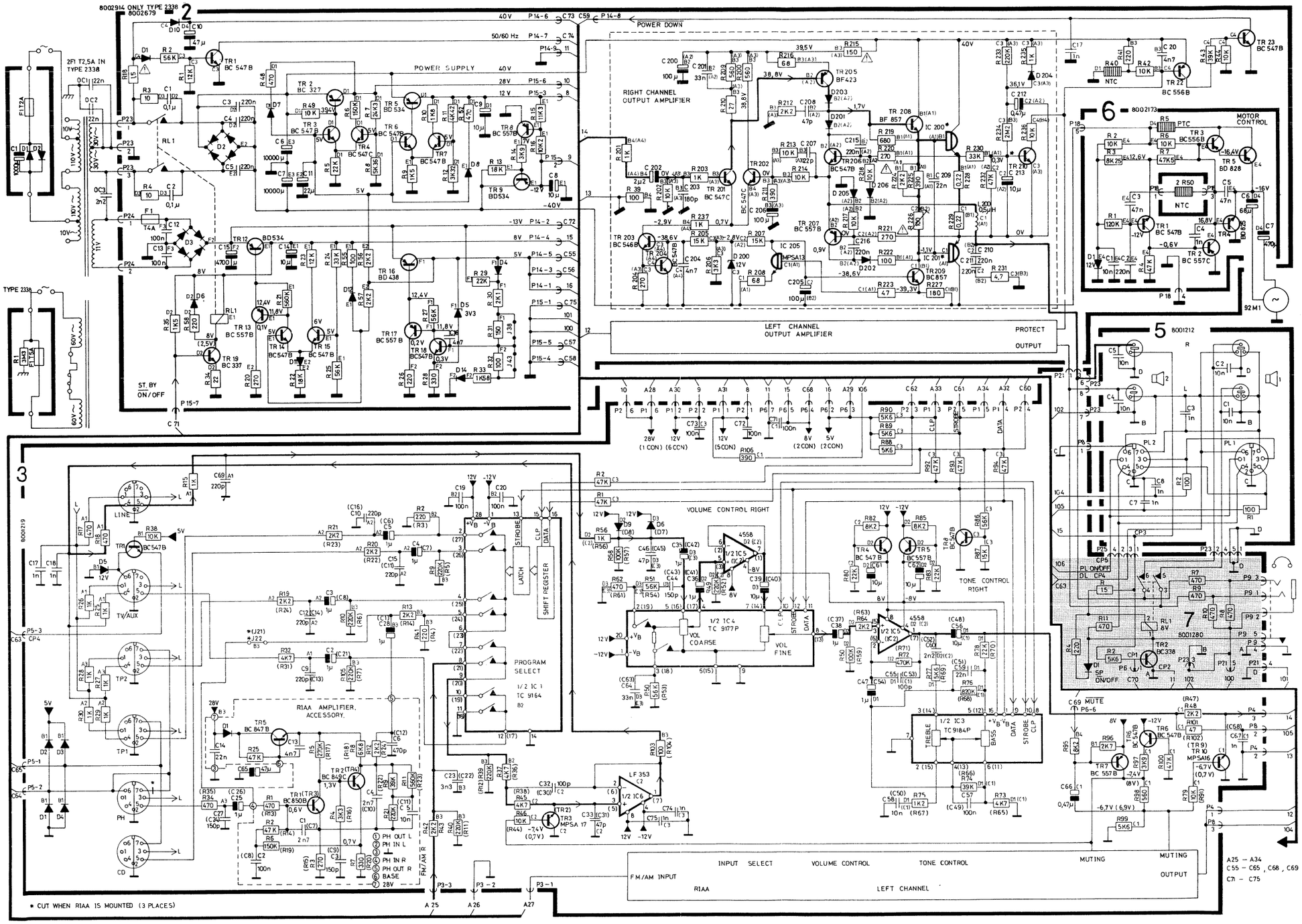

DIAGRAM C MICROCOMPUTER, IR TRANSCEIVER, DISPLAY

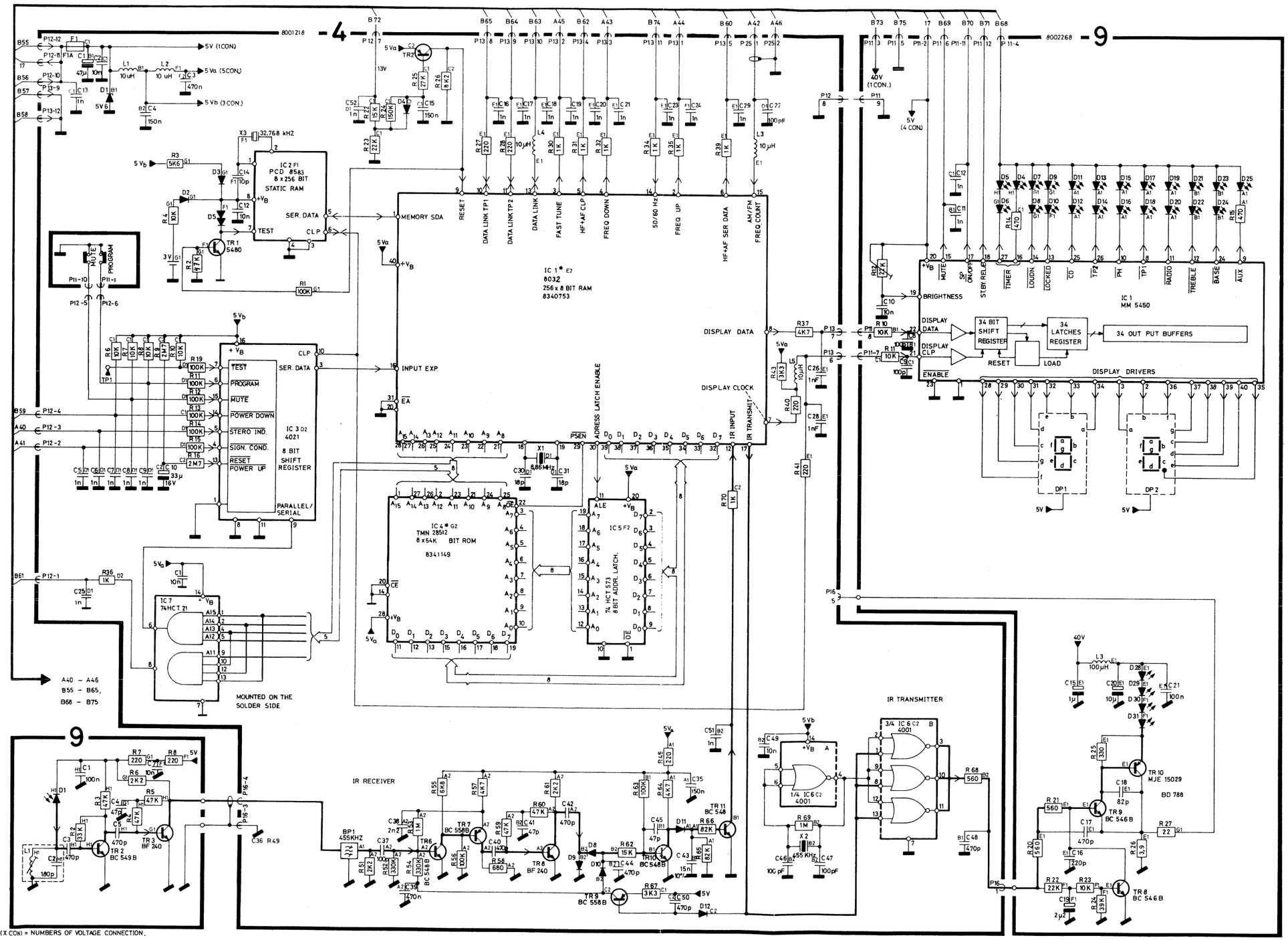

DIAGRAM D MASTER CONTROL PANEL, TYPE 1551

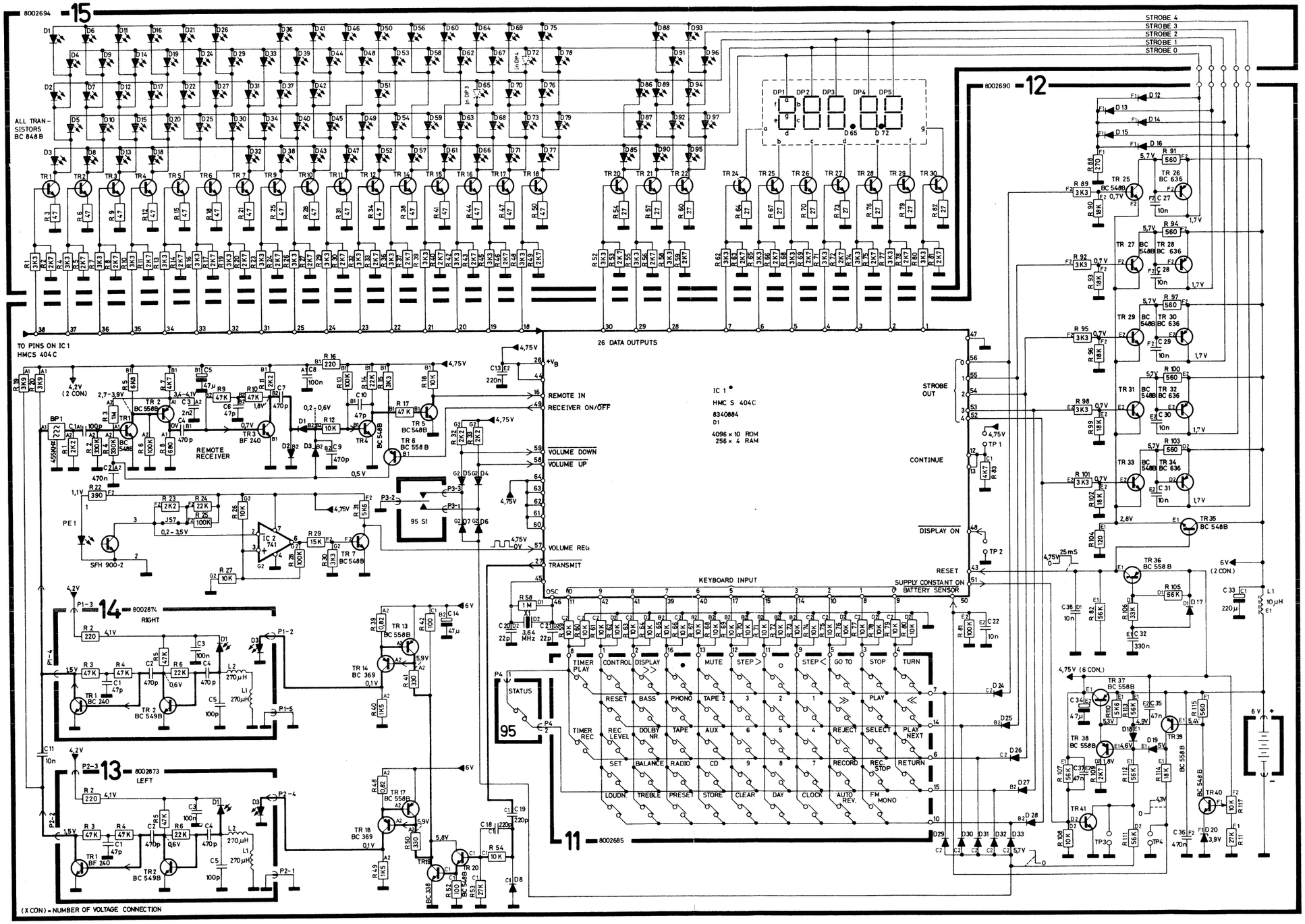

Bang & Olufsen

Microcomputer
8002690 PCB 12

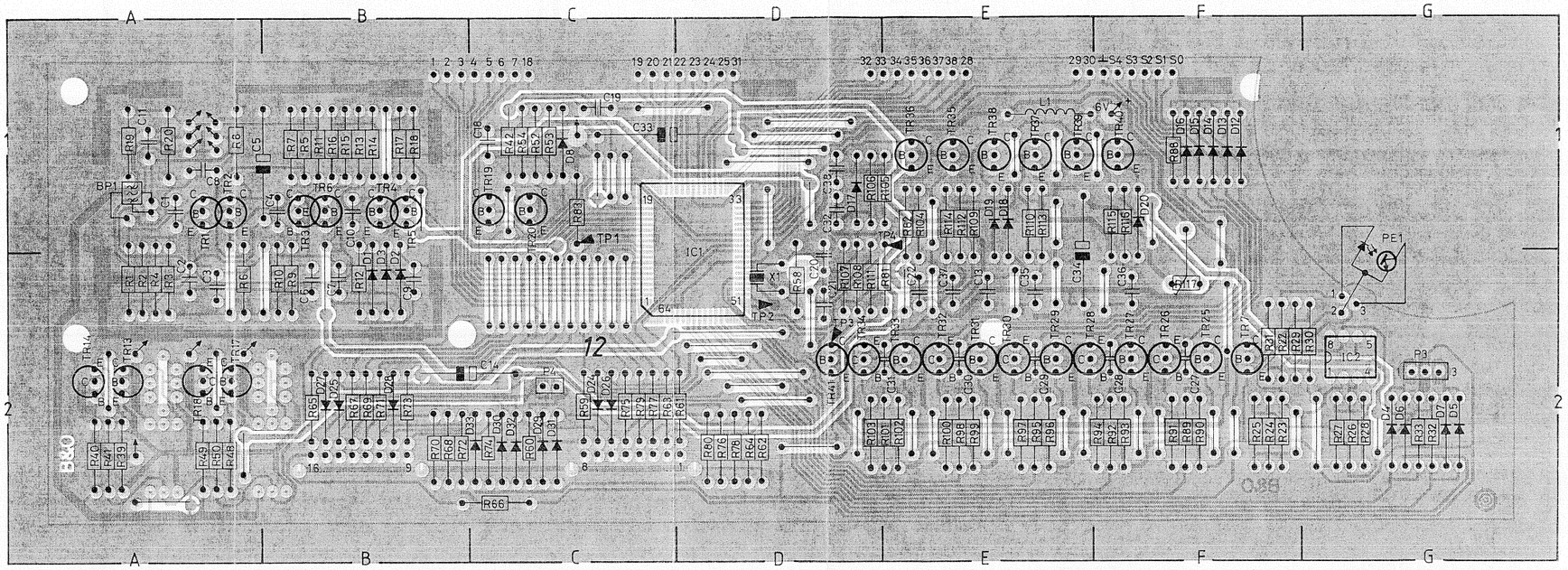

Display
8002694, PCB 15

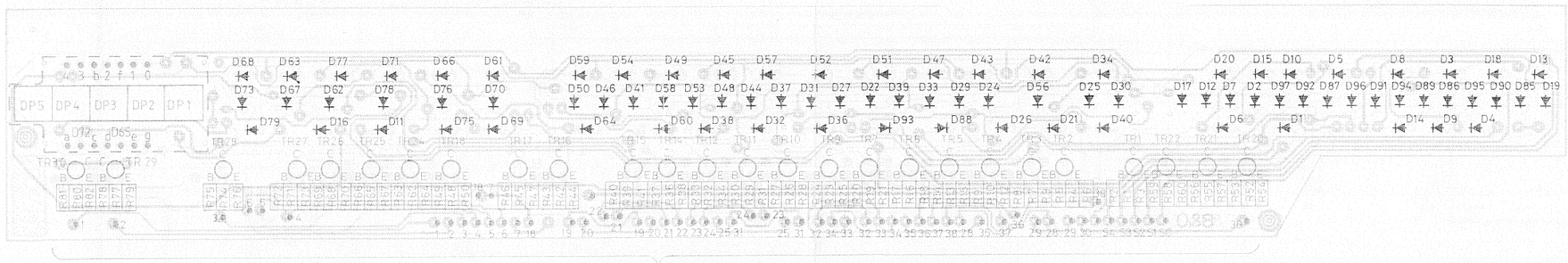

DISPLAY SURVEY FOR PCB 15
IN MASTER CONTROL PANEL

DISPLAY SURVEY

STE-	D3	DOLBY	D5	*Bar Led 13*	D2	NO	D4	PLAY	D1	38	
REO	D8	B	D10	*Bar Led 14*	D7	CON-	D9	NEXT	D6	37	
LOU-	D13	C	D15	*Bar Led 15*	D12	TACT	D14	SET	D11	36	µC 12IC1
DN	D18	OFF	D20	*Bar Led 16*	D17	*Bar Led 1*	D19	CLOCK	D16	35	
		▼	D25	5	D22	1	D24	NO	D21	34	
		▲	D30	6	D27	2	D29	AUTO	D26	33	
CON-	D32	1	D34	7	D31	3	D33			32	
TROL	D38	2	D40	8	D37	4	D39	PAUSE	D36	31	
RA-	D43	PHO-	D45	CD	D42	9	D44	13	D41	25	
DIO	D47	NO	D49			10	D48	14	D46	24	19 DATA LINES FOR CATHODES
TAPE-	D52	STD-	D54	AUX	D51	11	D53	+	D50	23	
2	D57	BY •	D59			12	D58	TRACK	D56	22	
MON	D61	FRI	D63			MA-	D62	NO	D60	21	
TUE	D66	SAT	D68	•	D65	NUAL	D67	SOURCE	D64	20	
WED	D71	SUN	D73	AM	D70	•	D72	NO	D69	19	
THU	D77	EVERY	D79	FM	D76	INDEX	D78	INPUT	D75	18	
Bar Led 2	D85	*Bar Led 10*	D87	*Bar Led 5*	D86					30	
Bar Led 3	D90	*Bar Led 11*	D92	*Bar Led 6*	D89	*Bar Led 8*	D91	RECOR-	D88	29	
Bar Led 4	D95	*Bar Led 12*	D97	*Bar Led 7*	D94	*Bar Led 9*	D96	DING	D93	28	

GREEN LED

STROBE 0 STROBE 1 STROBE 2 STROBE 3 STROBE 4

DP1 DP2 DP3 DP4 DP5

D65 D72

0 1 2 3 4 — 56 55 54 53 52 — 5 STROBE OUTPUTS FOR COMMON ANODE

a b c d e f g — 7 6 5 4 3 2 1 — 7 DATA LINES FOR CATHODES

PINS ON 12IC1

12IC

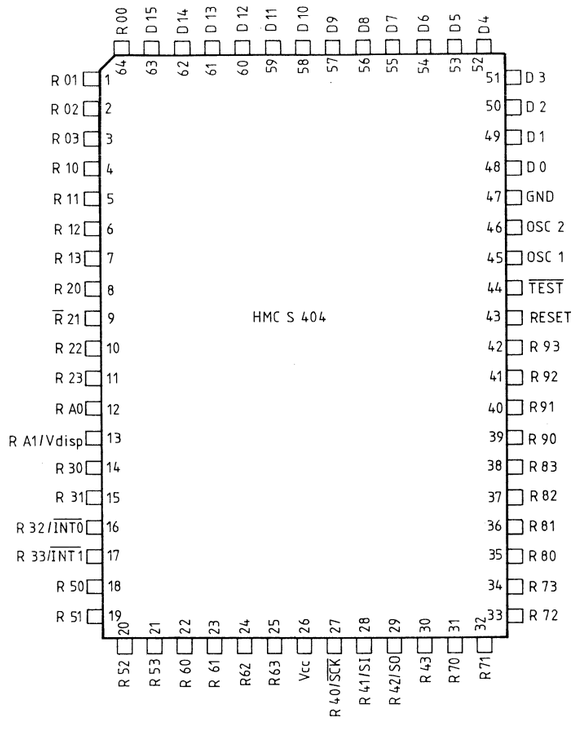

4IC1

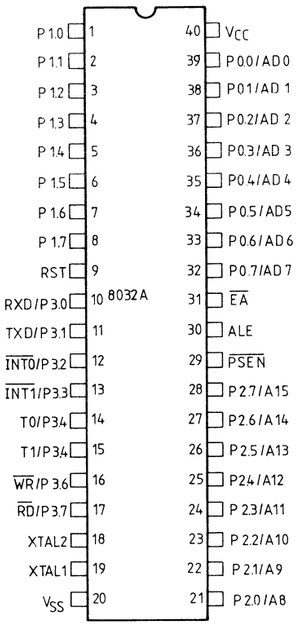

4IC2

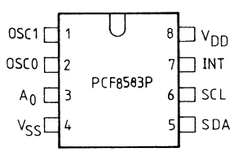

4IC4

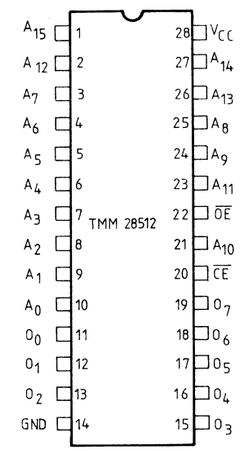

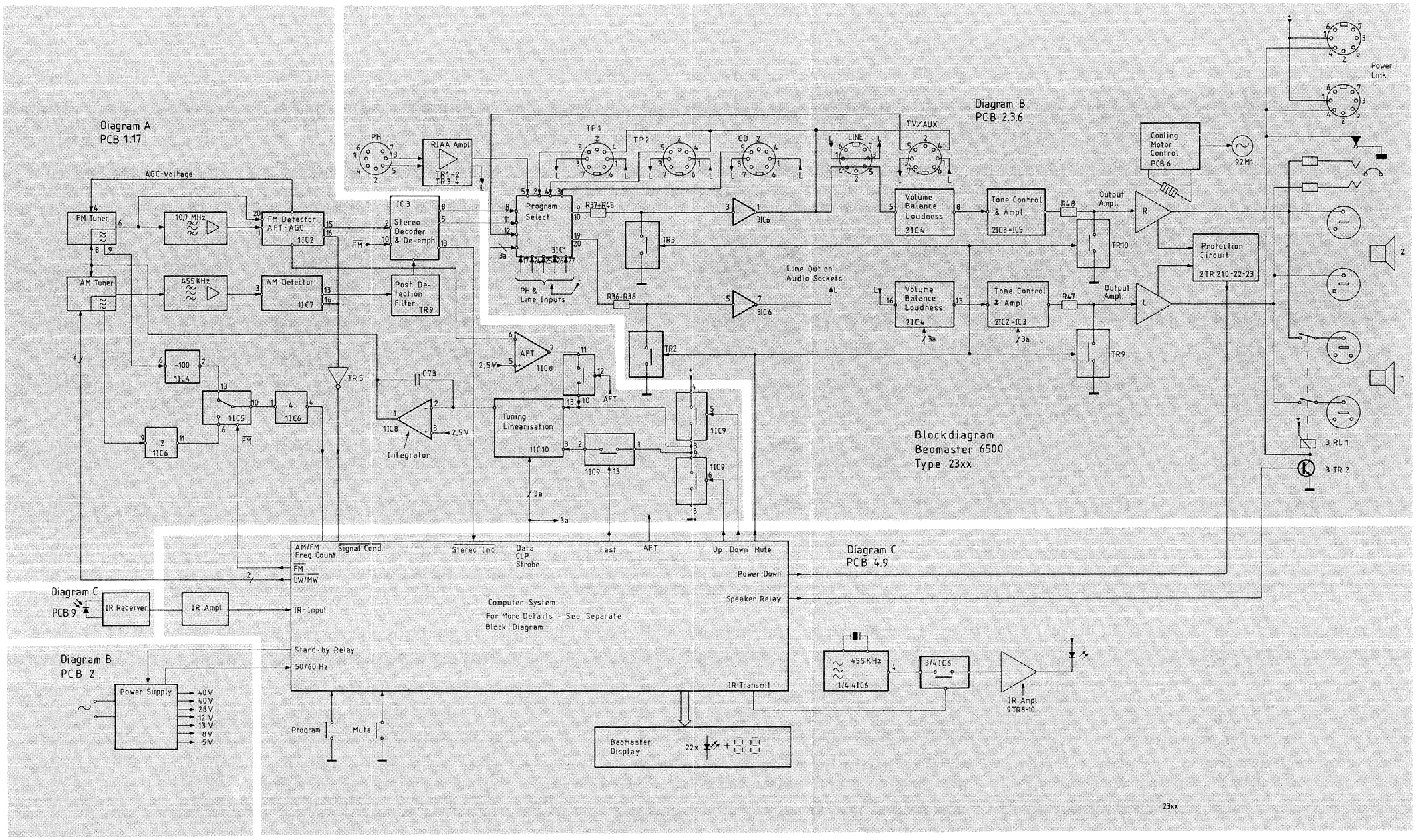
Diagram A
PCB 1.17
AGC-Voltage
FM Tuner
10,7 MHz
FM Detector AFT · AGC
1IC2
IC 3
Stereo Decoder & De-emph
FM
AM Tuner
455 KHz
AM Detector
1IC7
Post De-tection Filter
TR9
PH
RIAA Ampl
TR1-2 TR3-4
TP1
TP2
CD
LINE
TV/AUX
Program Select
3IC1
PH & Line Inputs
R37+R45
R36+R38
TR3
TR2
3IC6
Line Out on Audio Sockets
Volume Balance Loudness
2IC4
Tone Control & Ampl.
2IC3-IC5
2IC2-IC3
R48
R47
Output Ampl.
TR10
TR9
Diagram B
PCB 2.3.6
Cooling Motor Control PCB 6
92M1
Power Link
Protection Circuit
2TR 210-22-23
-100 1IC4
-2 1IC6
-4 1IC6
1IC5
FM
TR5
C73
AFT
1IC8
2,5V
Integrator
Tuning Linearisation
1IC10
1IC9
3a
Blockdiagram
Beomaster 6500
Type 23xx
3 RL 1
3 TR 2
AM/FM Freq. Count
Signal Cond.
FM
LW/MW
IR-Input
Stand-by Relay
50/60 Hz
Stereo Ind
Data
CLP
Strobe
Fast
AFT
Up Down Mute
Power Down
Speaker Relay
IR-Transmit
Computer System
For More Details - See Separate Block Diagram
Diagram C
PCB 9
IR Receiver
IR Ampl
Diagram C
PCB 4.9
Diagram B
PCB 2
Power Supply
40 V
40 V
28 V
12 V
13 V
8 V
5 V
Program
Mute
Beomaster Display
22x
455 KHz
1/4 41C6
3/4 1IC6
IR Ampl
9 TR8-10
23xx

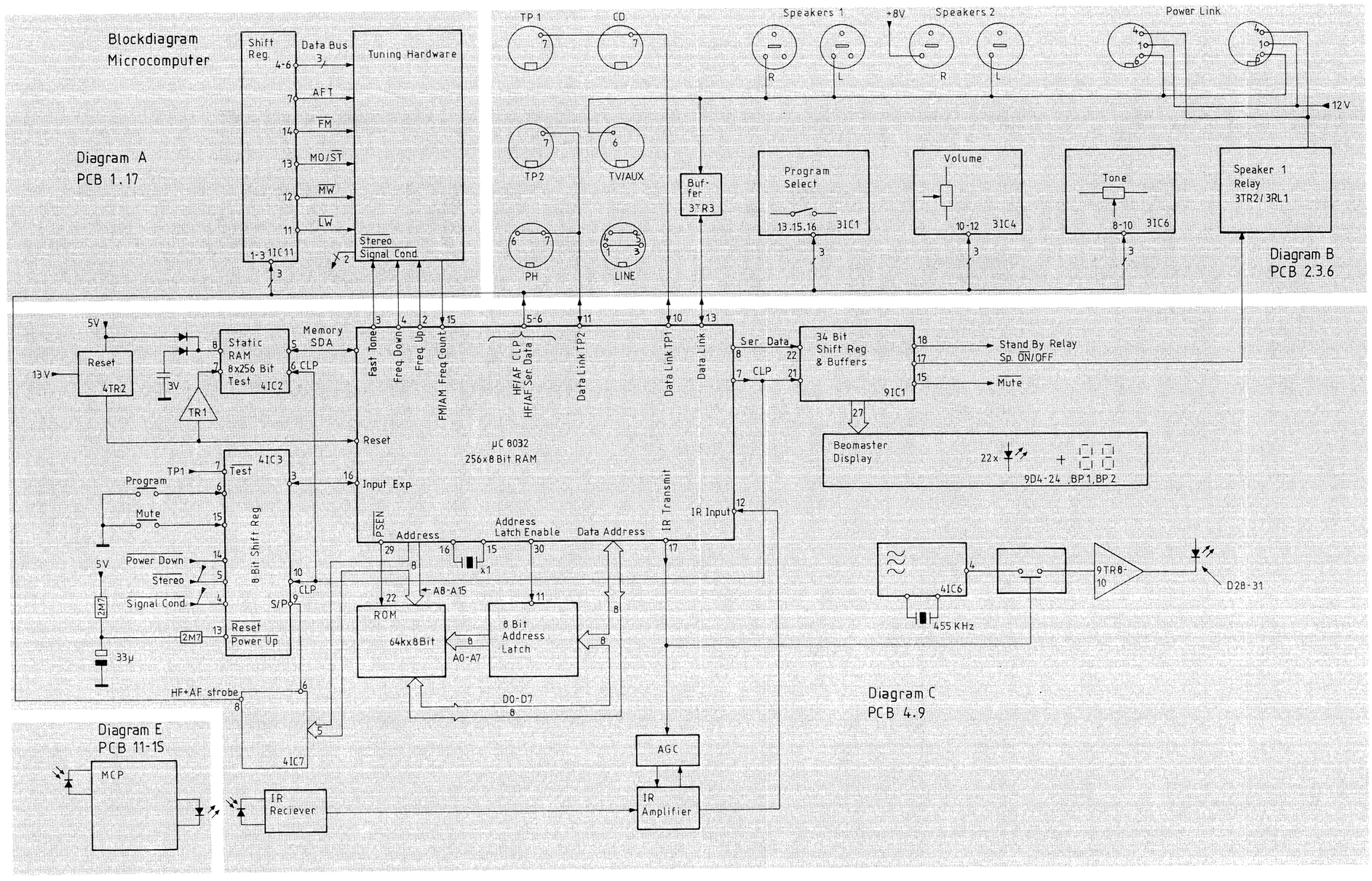
Blockdiagram Microcomputer
Diagram A
PCB 1.17
Shift Reg.
Data Bus 3
Tuning Hardware
AFT
FM
MO/ST
MW
LW
Stereo
Signal Cond.
1IC11
TP1
CD
TP2
TV/AUX
PH
LINE
Speakers 1
Speakers 2
+8V
Power Link
12V
Buf-fer 3TR3
Program Select
13.15.16 3IC1
Volume
10-12 3IC4
Tone
8-10 3IC6
Speaker 1 Relay 3TR2/3RL1
Diagram B
PCB 2.3.6
5V
Reset 4TR2
13V
3V
TR1
Static RAM 8x256 Bit Test 4IC2
Memory SDA
CLP
Fast Tone
Freq. Down
Freq. Up
FM/AM Freq Count
HF/AF CLP
HF/AF Ser. Data
Data Link TP2
Data Link TP1
Data Link
Ser. Data
CLP
34 Bit Shift Reg & Buffers 9IC1
Stand By Relay Sp. ON/OFF
Mute
Beomaster Display
22x
9D4-24 BP1, BP2
µC 8032
256x8 Bit RAM
Reset
Input Exp.
PSEN
Address
Address Latch Enable
Data Address
IR Transmit
IR Input
4IC3
Test
TP1
Program
Mute
Power Down
Stereo
Signal Cond.
Reset Power Up
8 Bit Shift Reg
2M7
33µ
S/P
CLP
ROM 64kx8Bit
A8-A15
A0-A7
8 Bit Address Latch
D0-D7
HF+AF strobe
4IC7
x1
4IC6
455 KHz
9TR8-10
D28-31
Diagram C
PCB 4.9
AGC
IR Amplifier
IR Reciever
Diagram E
PCB 11-15
MCP

3-1

LIST OF ELECTRICAL PARTS

In the player chip components have been applied. For insertion and removal of chip components see the figure below.

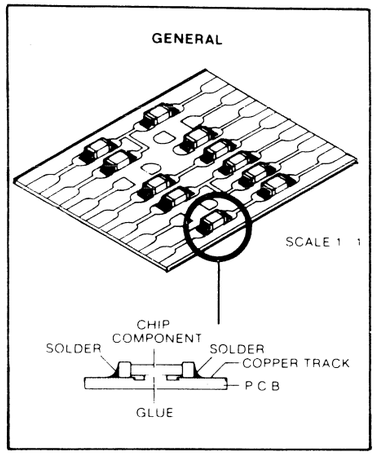

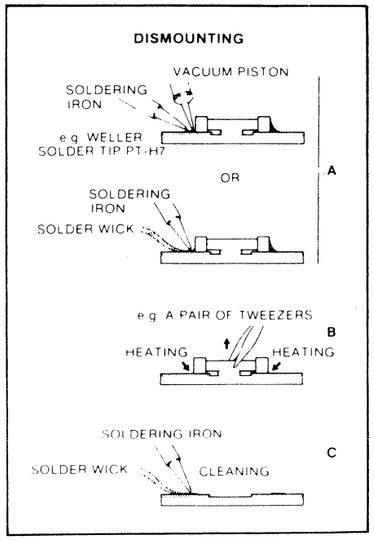

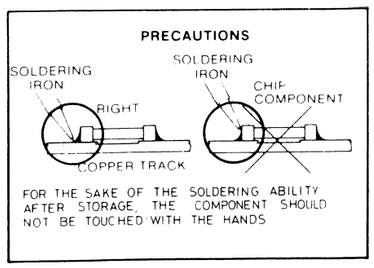

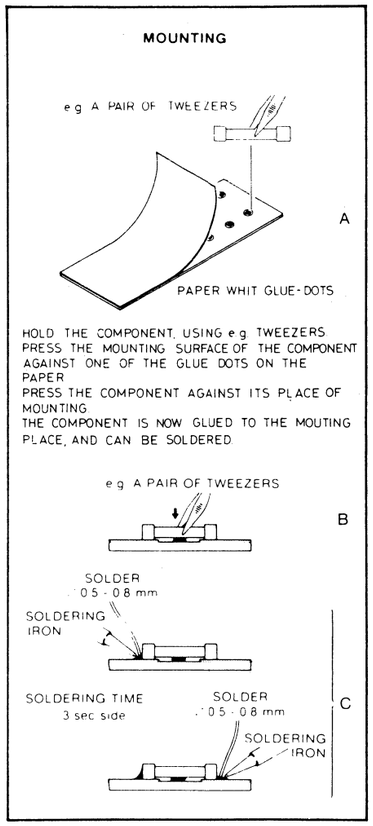

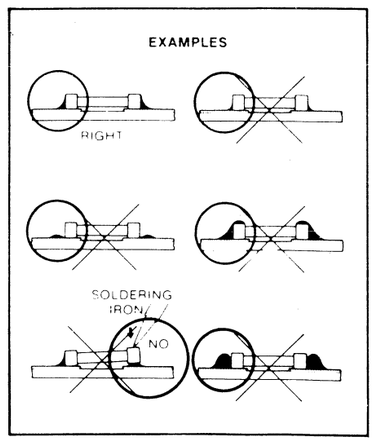

3-1

LIST OF ELECTRICAL PARTS

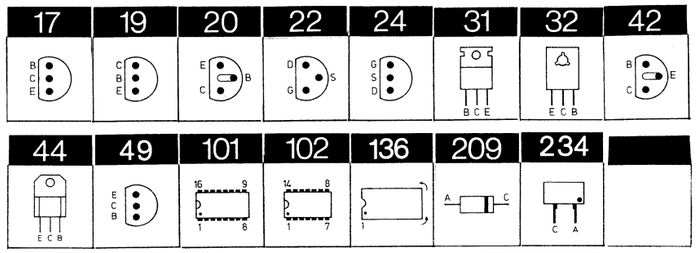

Resistors not referred to are standard, see page 3-8

△ indicates that static electricity may destroy the component.

* Specially selected or adapted sample.

PCB 1,
8002671 HF, type 2336, 2337
8002818 HF, type 2338, 2340
8002908 HF, type 2339

IC2	8340756	**136**	LM1865	IC7	8340757	**136**	LA1245
IC3	8340758	**136**	LA3401	IC8	8340763	**136**	LF353
IC4	8340492	**102**	SP8629	IC9△	8340202	**102**	4066
IC5△	8340245	**102**	4011	IC10△	8340602	**101**	4052
IC6△	8341102	**101**	74HC4520	IC11△	8340782	**136**	4094

TR1-TR4	8320625	**42**	BF240	TR14*△	8320396	**24**	MPF4392
				TR15△	8320535	**22**	BF256C
TR5	8320497	**20**	BC547B	TR20	8320521	**20**	BC556B
TR6	8320509	**20**	BC548B	TR21	8320497	**20**	BC547B
TR7	8320503	**20**	BC557B	TR22	8320521	**20**	BC556B
TR9	8320627	**20**	BC549B	TR23	8320497	**20**	BC547B
TR10-TR11	8320503	**20**	BC557B	TR24	8320640	**17**	BC636
				TR25	8320497	**20**	BC547B
TR12	8320497	**20**	BC547B	TR200	8320509	**20**	BC548B
TR13	8320512	**20**	BC338-25				

D1	8300058	**209**	1N4148	D8	8300212	**209**	75V 0,2A
D2	8300568	**234**	SVc333C	D9	8300568	**234**	SVc333C
D3-D5	8300385	**209**	BA423	D10	8300212	**209**	75V 0,2A
				D11-D14	8300058	**209**	1N4148
D6	8300058	**209**	1N4148				
D7	8300385	**209**	BA423				

R25	5370326	10kΩ 20% 0,1W	R142	5020336	69,8kΩ 1% 1/4W
R51	5370128	100kΩ 20% 0,1W	R143	5020263	100kΩ 1% 1/4W
R73	5370330	220kΩ 20% 0,1W	R144	5020336	69,8kΩ 1% 1/4W
R141	5020263	100kΩ 1% 1/4W	R204	5370328	47kΩ 20% 0,1W

C2	4010106	10nF -20+80% 40V	C30	4130230	100nF 20% 63V
C3	4010101	4,7nF 10% 63V	C31	4010103	2,2nF 10% 63V
C4	4010107	22nF -20+80% 40V	C32	4010107	22nF -20+80% 40V
C5	4010101	4,7nF 10% 63V	C33	4130179	100nF 20% 63V
C6	4010107	22nF -20+80% 40V	C34	4010105	1nF 10% 63V
C7-C8	4010101	4,7nF 10% 63V	C35-C36	4200510	10µF 20% 16V
C9	4200512	1µF 20% 50V	C37	4010118	330pF 10% 63V
C10	4200129	100µF -20+50% 16V	C38	4200510	10µF 20% 16V
C11-C12	4010105	1nF 10% 63V	C39	4030023	47nF -20+80% 16V
			C40	4200523	0,47µF 20% 50V
C13	4200515	4,7µF 20% 25V	C41-	4200512	1µF 20% 50V
C14	4000142	82pF 5% 63V	C42		
C15-C19	4010106	10nF -20+80% 40V	C43	4010106	10nF -20+80% 40V
			C44	4010105	1nF 10% 63V
C20	4200525	22µF 20% 10V	C45	4200129	100µF -20+50% 16V
C21	4010106	10nF -20+80% 40V	C48	4000137	47pF 5% 63V
C22	4010118	330pF 10% 63V	C49-	4130230	100nF 20% 63V
C23	4010106	10nF -20+80% 40V	C50		
C24	4130070	1µF 10% 50V	C51	4100266	330pF 2,5% 63V
C25-C26	4130230	100nF 20% 63V	C52	4000150	68pF 5% 63V
			C53	4000155	56pF 5% 63V
C27-C28	4010105	1nF 10% 63V	C54	4100233	150pF 5% 63V
			C55	4340002	2-22pF
C29	4000191	47pF 5% 63V	C56	4340003	5,5-65pF

C57-C58	4130230	100nF 20% 63V	C83	4340002	2-22pF
C59	4130233	220nF 20% 63V	C84	4130233	220nF 20% 63V
C60	4130235	47nF 20% 63V	C85	4010103	2,2nF 10% 63V
C61-C62	4200515	4,7µF 20% 25V	C86	4130233	220nF 20% 63V
C63	4130235	47nF 20% 63V	C87	4010105	1nF 10% 63V
C64	4200517	2,2µF 20% 50V	C88	4130235	47nF 20% 63V
C65	4200129	100µF -20+50% 16V	C89-C90	4010107	22nF -20+80% 40V
C66	4010106	10nF -20+80% 40V	C91	4130230	100nF 20% 63V
C67	4130235	47nF 20% 63V	C92	4200510	10µF 20% 16V
C68-C69	4100210	1,5nF 5% 63V	C93	4010107	22nF -20+80% 40V
C70	4000226	68pF 5% 63V	C94	4010105	1nF 10% 63V
C71	4010107	22nF -20+80% 40V	C96-C97	4130230	100nF 20% 63V
C72	4010106	10nF -20+80% 40V	C98	4200483	47µF 20% 16V
C73	4130390		C200	4100209	470pF 5% 63V
C76	4100247	1,8nF 5% 63V	C201	4200510	10µF 20% 16V
C77	4010103	2,2nF 10% 63V	C202	4100238	3,3nF 5% 63V
C78	4130230	100nF 20% 63V	C203	4100235	680pF 5% 63V
C79	4100210	1,5nF 5% 63V	C204	4100261	6,8nF 2,5% 63V
C80	4130230	100nF 20% 63V	C205	4100260	2,2nF 2,5% 63V
C81	4340003	5,5-65pF	C206	4100210	1,5nF 5% 63V
C82	4130230	100nF 20% 63V	C207	4200515	4,7µF 20% 25V
			C208	4130230	100nF 20% 63V

L1	8020552	Coil 10uH 10%	L11	8020558	Coil Antenne LB
L2	8020568	Coil 2,7uH	L12	8020557	Coil Antenne MB
L3	8020569	Coil 18uH 10%	L13	8020561	Coil MF 455H
L4	8020552	Coil 10uH 10%	L14	8020562	Coil MF 455kHz
L5	8022240	Coil 19,5mH 2%	L200-L201	8022239	Coil 32mH 2%
L8	8020559	Coil MB S0116			
L9	8020560	Coil LB S0116			

BP1-BP3	8030134	10,7mHz	BP4	8030056	455kHz 1kHz

TU1	8050093	Tuner
	8050102	Tuner, type 2339

P1	7220431	Plug 9/9	P3	7220312	Plug 2pol.
P2	7220428	Plug 6/6	P4	7210612	Socket Antenne

X1	8030087	456kHz	X2	8030088	455kHz

PCB 2, 8002679
8002914, type 2338
Output and Power supply

IC200*	8340470	**31**	BDV65B 100V	IC205	8340400	**19**	MPSA13 30V
IC201*	8340469	**31**	BDV64B 100V				

TR1	8320497	**19**	BC547B	TR18	8320497	**20**	BC547B
TR2	8320552	**20**	BC327-25	TR19	8320507	**20**	BC337-25
TR3	8320497	**20**	BC547B	TR22	8320521	**20**	BC556B
TR4	8320498	**20**	BC547C	TR23	8320497	**20**	BC547B
TR5	8320369	**31**	BD534 45V	TR201-TR202	8320498	**20**	BC547C
TR6-TR7	8320497	**20**	BC547B	TR203	8320514	**20**	BC546B
TR8	8320503	**20**	BC557B	TR204	8320497	**20**	BC547B
TR9	8320369	**31**	BD534 45V	TR205	8320631	**17**	BF423
TR12	8320369	**31**	BD534 45V	TR206	8320497	**20**	BC547B
TR13	8320503	**20**	BC557B	TR207	8320503	**20**	BC557B
TR14-TR15	8320497	**20**	BC547B	TR208-TR209	8320646	**44**	BF858
TR16	8320428	**32**	BD438	TR210	8320505	**49**	BF422
TR17	8320503	**20**	BC557B				

Bang & Olufsen

19	20	49	101	103	136	209	214
	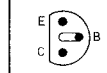				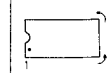	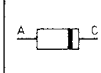	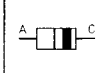

Resistors not referred to are standard, see page 3-8

△ indicates that static electricity may destroy the component.

* Specially selected or adapted sample.

D1	8300058	**209**	1N4148	D11-D12	8300058	**209**	1N4148
D2	8300487	-	KBU6D	D14	8300212	**209**	1N4448
D3	8300297	-	B80 C3700/2200	D200	8300029	**209**	12V 5% 0,4W
D4	8300058	**209**	1N4148	D201-D203	8300058	**209**	1N4148
D5	8300541	**209**	3,3V 2% 0,4W	D204	8300409	**214**	BAV20 150V
D6-D8	8300058	**209**	1N4148	D205-D206	8300058	**209**	1N4148
D10	8300023	**209**	1N4002 100V				

R7	5020239	24,3kΩ 1% 1/4W	R41	5020782	365Ω 1% 1/4W
R8	5020219	5,36 1% 1/4W	R50	5220036	330kΩ 10% 1/2W
R11	5020770	4,42kΩ 1% 1/4W	R211	5010797	390Ω 2% 1/4W
R12	5020291	3,32 1% 1/4W	R214	5020110	10kΩ 1% 1/4W
R15	5020231	11,3kΩ 1% 1/4W	R215	5020633	150Ω 5% 0,35W
R16	5020335	10,2kΩ 1% 1/4W	R220-R221	5020658	270Ω 5% 0,3W
R18	5020881	22Ω 10% 0,25W			
R30	5020200	2,1kΩ 1% 1/4W	R226	5370341	100Ω 20% 0,1W
R33	5020194	1,58kΩ 1% 1/4W	R228-R229	5102016	0,22Ω 10% 1W
R40	5220036	330kΩ 10% 1/2W			

C3-C5	4130280	220nF 20% 100V	C201	4130257	33nF 20% 63V
C8-C9	4200510	10µF 20% 16V	C202	4200517	2,2µF 20% 50V
C10	4200688	47µF 20% 50V	C203	4000151	180pF 5% 63V
C11	4200525	22µF 20% 10V	C204	4010101	4,7nF 10% 63V
C12-C13	4130230	100nF 20% 63V	C205-C206	4200511	100µF 20% 10V
C14	4200510	10µF 20% 16V	C207	4000136	22pF 5% 63V
C15	4200417	4700µF -10+50% 16V	C208	4000343	47pF 2% 63V
C16	4010101	4,7nF 10% 63V	C209	4130262	22nF 20% 63V
C17	4010105	1nF 10% 63V	C210-C211	4130233	220nF 20% 63V
C20	4010101	4,7nF 10% 63V	C212	4200523	0,47µF 20% 50V
C200	4200368	100µF -10+100% 63V	C213	4200510	10µF 20% 16V
			C215-C216	4130233	220nF 20% 63V

L200	6850114	Coil o,5uH

P	7220580	Plug 2pol.	P18	7220160	Plug 5/4
P	7210510	Stikdåse minijack	P23	7220185	Plug 3/3
P14	7220431	Plug 9/9	P24	7220195	Plug 2/2
P15	7220429	Plug 7/7			

F	6600010	T4A-T/250V

RL6	7600046	Relay 6V

PCB 3, 8001219
Preamplifier

IC1△	8340759	**136**	TC9164	IC4△	8340760	**136**	TC9177
IC2	8340790	**103**	4558	IC5	8340790	**103**	4558
IC3△	8340761	**136**	TC9184	IC6△	8340763	**136**	LF353

TR1	8320497	**20**	BC547B	TR6	8320497	**20**	BC547B
TR2-TR3*	8320639	**49**	MPSA17	TR7	8320503	**20**	BC557B
				TR8	8320497	**20**	BC547B
TR4	8320497	**20**	BC547B	TR9-TR10	8320525	**19**	MPSA16
TR5	8320503	**20**	BC557B				

D1-D4	8300058	**209**	1N4148	D6-D9	8300058	**209**	1N4148
D5	8300407	**209**	12V 2% 0,4W				

C1-C8	4200512	1µF 20% 50V	C45-C46	4000193	47pF 5% 63V
C9-C16	4010155	220pF 63V	C47	4200512	1µF 20% 50V
			C48	4200510	10µF 20% 16V
C17-C18	4010105	1nF 10% 63V	C49	4130306	100nF 10% 63V
			C50	4130268	10nF 5% 63V
C19-C20	4130306	100nF 10% 63V	C51	4130304	22nF 10% 63V
			C52	4100237	2,2nF 5% 63V
C21	4200512	1µF 20% 50V	C53	4000204	100pF 5% 63V
C22-C23	4010111	3,3nF 10% 63V	C54	4200512	1µF 20% 50V
			C55	4000204	100pF 5% 63V
C24	4000205	150pF 5% 63V	C56	4200510	10µF 20% 16V
C25-C26	4200517	2,2µF 20% 50V	C57	4130306	100nF 10% 63V
			C58	4130268	10nF 5% 63V
C27	4000205	150pF 5% 63V	C59	4130304	22nF 10% 63V
C28	4200512	1µF 20% 50V	C60	4100237	2,2nF 5% 63V
C30	4000243	100pF 5% 63V	C61-C62	4200510	10µF 20% 16V
C31	4000193	47pF 5% 63V			
C32	4000243	100pF 5% 63V	C63-C64	4130305	33nF 10% 63V
C33	4000193	47pF 5% 63V			
C35-C38	4200512	1µF 20% 50V	C65	4200688	47µF 20% 50V
			C66	4200523	0,47µF 20% 50V
C39-C40	4200510	10µF 20% 16V	C69-C70	4010155	220pF 10% 63V
C41-C42	4200512	1µF 20% 50V	C71-C73	4130306	100nF 10% 63V
C43-C44	4000205	150pF 5% 63V	C74-C75	4010105	1nF 10% 63V

P1-P2	7220428	Plug 6/6	P6	7220429	Plug 7/7
			P8	7220710	Plug 3pol.
P3	7220425	Plug 3/3	P9-P14	7210418	Socket 7pol.
P4	7220313	Plug 3pol.			
P5	7220425	Plug 3/3			

PCB 4, 8001218
Microcomputer

IC1△	8341069	**136**	8032	IC4△	8341309		27512
IC2△	8341105	**103**	PCF8583	IC5△	8340777	**136**	74HCT573
IC3△	8340276	**101**	4021	IC6△	8340373	**136**	4001B

TR1	8320509	**20**	BC548B	TR8	8320625	**19**	BF240
TR2	8320510	**20**	BC558B	TR9	8320510	**20**	BC558B
TR6	8320509	**20**	BC548B	TR10-TR11	8320509	**20**	BC548B
TR7	8320510	**20**	BC558B				

D1	8300128	**209**	5,6V 5% 0,4W	D5	8300056	**209**	ZTE 1.5
D2	8300600	**209**	1N4148	D8-D12	8300058	**209**	1N4148
D3-D4	8300058	**209**	1N4148				

Bang & Olufsen

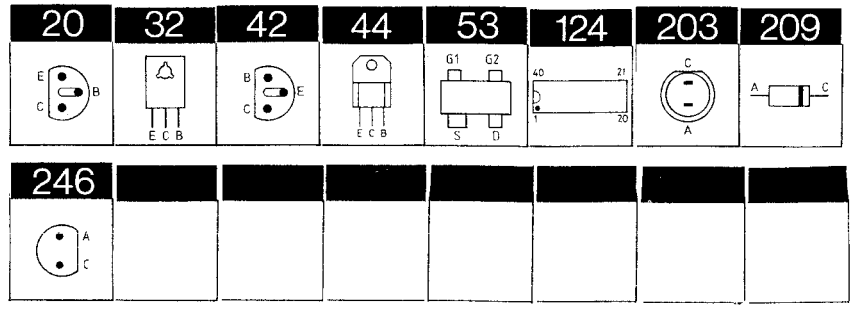

Resistors not referred to are standard, see page 3-8

△ indicates that static electricity may destroy the component.

C1	4200364	47µF -10+50% 10V	C35	4130307	150pF 10% 63V
C2	4010106	10nF -20+80% 40V	C37	4000204	100pF 5% 63V
C3	4130313	470nF 20% 63V	C38	4010103	2,2nF 10% 63V
C4	4130307	150nF 10% 63V	C39	4130313	470nF 20% 63V
C5-	4010035	1µF 10% 63V	C40	4010128	470pF 10% 63V
C9			C41	4000193	47pF 5% 63V
C10	4200414	33µF -10+50% 16V	C42	4010128	470pF 10% 63V
C12	4010201	10nF -10+80% 40V	C43	4130315	15nF 5% 63V
C13	4010105	1nF 10% 63V	C44	4010128	470pF 10% 63V
C14	4000144	10pF 63V	C45	4000193	47pF 5% 63V
C15	4130307	150nF 10% 63V	C46-	4000204	100pF 5% 63V
C16-	4010035	1nF 10% 63V	C47		
C21			C48	4010128	470pF 10% 63V
C22	4000204	100pF 5% 63V	C49	4010106	10nF -20+80% 40V
C23-	4010035	1nF 10% 63V	C50	4010128	470pF 10% 63V
C26			C51	4010105	1nF 10% 63V
C28-	4010035	1nF 10% 63V	C52	4010035	1nF 10% 63V
C29					
C30-	4000136	22pF 5% 63V			
C31					

L1-	8020342	10uH	L3-	8020707	Coil 4,7uH 10%
L2			L4		
			L5	8020707	Coil 4,7uH 10%

F1	6604009	Sikr. 1A 250V

BP1	8030056	455kHz

P4	7200056	Socket 28pol.	P16	7220585	Plug 5pol.
P12-	7220554	Plug 12/12	P25	7220176	Plug 2/2
P13					

X1	8090104	Crystal 11,0592 mHz	X3	8090078	32,768kHz
X2	8030024	455kHz		8700027	Lithium battery

PCB 5, 8001212
Socket panel

C1-	4130214	10nF 20% 63V	C4-	4130214	10nF 20% 63V
C2			C5		
C3	4010027	1nF 10% 63V	C7-	4010027	1nF 10% 63V
			C8		

PCB 6, 8002173
Fan Regulation

TR1	8320497	**20**	BC547B	TR4-	8320542	**44**	BD825-16 45V
TR2	8320540	**20**	BC557C	TR5			
TR3	8320521	**20**	BC556B				

D1	8300029	**209**	12,0V 5% 0,4W

R3	5020565	8,25kΩ 1% 1/4W	R7	5020539	47,5kΩ 1% 1/4W
R5	5230012	15Ω 20% 1,8W			

C1	4010041	10nF -20+80% 40V	C5	4130235	47nF 20% 63V
C2	4130259	220nF 1% 160V	C6	4200542	68µF 20% 63V
C3	4130260	47nF 1% 160V	C7	4200102	470µF -10+100% 40V
C4	4010105	1nF 10% 63V			

PCB 7, 8001280
Relay

TR2	8320512	BC338-25			

D1	8300058	**209** 1N4148			

R7	5020455	470Ω 5% 1W	R9	5020455	470Ω 5% 1W

P9	7220585	Plug 5pol.	P23	7220319	Plug 8pol.
P21	7220206	Plug 5/4	P25	7220711	Plug 4pol.

RL1	7600073	Relay 6V

PCB 9, 8001284
Display

IC1△	8340467	**124**	5450

TR2	8320627	**20**	BC549B	TR9	8320514	**20**	BC546B
TR3	8320625	**42**	BF240	TR10	8320683	**32**	BD788 60V
TR8	8320776		BC546B				

D4-D25	8330150	**246**	Led red	D28-D31	8330227	**203**	IR Emitter

R12	5370068	22kΩ 20% 0,1W

C1	4130230	100nF 20% 63V	C15	4200380	1µF -20+50% 63V
C3	4010128	470pF 10% 63V	C16	4010155	220pF 10% 63V
C4	4000193	47pF 5% 63V	C17	4010128	470pF 10% 63V
C5-C6	4010128	470pF 10% 63V	C18	4000142	82pF 5% 63V
			C19	4201035	2,2µF -10+50% 63V
C7	4010106	10nF -20+80% 40V	C20	4200342	10µF -10+50% 63V
C8-C9	4000243	100pF 5% 63V	C21	4130230	100nF 20% 63V
			C23-C24	4010105	1nF 10% 63V
C10	4010189	10nF 30% 25V			
C11-C12	4010105	1nF 10% 63V			

L1	8020562	Coil 455kHz	L3	8020621	Coil 100uH

P	7220577	Plug 17pol.	P11	7220548	Plug 12/12

S1-S2	7400268	Omskifter 1pol

PCB 17, 8050093
8050102 type 2339
Tuner

TR1-TR2	8320610	**53**	BF995	TR3-TR4	8320672	**53**	BFS20

D1-D4	8300301	**209**	BB204

R32-R34	5370253	47kΩ 20% 0,1W

Bang & Olufsen

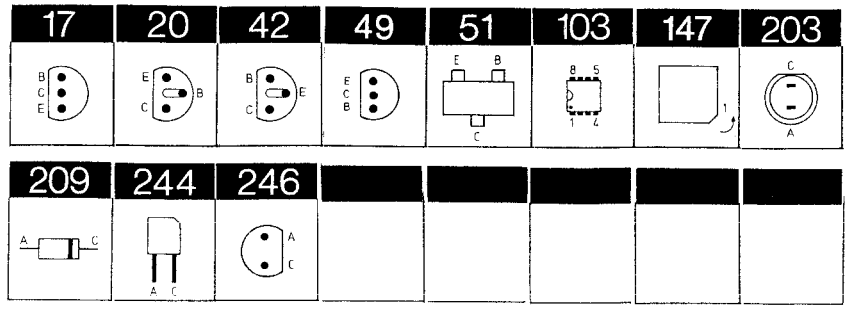

Resistors not referred to are standard, see page 3-8

△ indicates that static electricity may destroy the component.

* Specially selected or adapted sample.

PCB 12, 8002690
Microcomputer

C1	4000331	6,8pF 0,25pF 50V		C17-C18	4000260	5pF 0,5pF 50V	
C2	4000257	27pF 5% 50V					
C3-C6	4010132	1nF 10% 50V		C19-C20	4010132	1nF 10% 50V	
C7	4000257	27pF 5% 50V		C21	4000275	15pF 5% 50V	
C8	4000332	8,2pF 0,5pF 50V		C22	4000228	12pF 5% 50V	
C9	4000258	4pF 0,25pF 50V		C23	4010132	1nF 10% 50V	
C10	4000330	5,6pF 0,5pF 50V		C24	4010157	10nF 10% 50V	
C12	4010132	1nF 10% 50V		C25	4000294	0,5pF 0,25pF 50V	
C13	4000231	68pF 5% 50V		C26	4200512	1µF 20% 50V	
C14	4010157	10nF 10% 50V		C27-C29	4000321	220pF 5% 50V	
C16	4000332	8,2pF 0,5pF 50V					

L1	6850158	Coil 70nH		L6	8020632	Coil 0,68uH 20%	
L2	6850157	Coil 115nH		L7	8020567	Coil 10,7mHz	
L3	8020577	Coil 2,2uH 10%		L8	6850159	Coil 100nH	
L4-L5	6850157	Coil 115nH					

P1	7220129	Plug 2/2		P3	7220210	Plug 4/4	
P2	7220212	Plug 3/3					

IC1△	8340884	**147**	HMC S4040	IC2	8340141	**103**	LM 741

TR1	8320108	**20**	BC 548B	TR20-TR25	8320108	**20**	BC 548B
TR2	8320104	**20**	BC 558B				
TR3	8320311	**42**	BF 240	TR26	8320640	**49**	BC 636
TR4-TR5	8320108	**20**	BC 548B	TR27	8320108	**20**	BC 548B
				TR28	8320640	**49**	BC 636
TR6	8320104	**20**	BC 558B	TR29	83202108	**20**	BC 548B
TR7	8320108	**20**	BC 548B	TR30	8320640	**49**	BC 636
TR11	8320104	**20**	BC 558B	TR31	8320108	**20**	BC 548B
TR12	8320450	**17**	BC 369	TR32	8320640	**49**	BC 636
TR13	8320104	**20**	BC 558B	TR33	8320108	**20**	BC 548B
TR14	8320450	**17**	BC 369	TR34	8320640	**49**	BC 636
TR15	8320104	**20**	BC 558B	TR35	8320108	**20**	BC 548B
TR16	8320450	**17**	BC 369	TR36-TR39	8320104	**20**	BC 558B
TR17	8320104	**20**	BC 558B				
TR18	8320450	**17**	BC 369	TR40-TR41	8320108	**20**	BC 548B
TR19	8320329	**20**	BC 338-25/18				

D1-D19	8300058	**209**	1N 4148	D4-D33	8300058	**209**	1N 4148
D20	8300404	**209**	BZX79B 12				

R58	5020288	1 MΩ 1% 1/4W
R117	5370074	10 kΩ 20% 0.1W

3-8

C1	4003128	100 pF 5% 63V	C18-C19	4010088	220 pF 63V
C2	4130228	470 nF 20% 63V			
C3	4010103	2.2 nF 10% 63V	C20-C21	4000136	22 pF 5% 63V
C4	4010024	470 pF 10% 63V			
C5	4200634	47 µF -10+50% 10V	C22	4010041	10 nF -20+80% 40V
C6	4000057	47 pF 5% 63V	C27-C32	4010041	10 nF -20+80% 40V
C7	4010024	470 pF 10% 63V			
C8	4130179	100 nF 20% 63V	C33	4200396	220 µF -20+50% 16V
C9	4010024	470 pF 10% 63V	C34	4200364	47 µF -10+50% 10V
C10	4000057	47 pF 5% 63V	C35	4130210	47 nF 20% 63V
C11	4010041	10 nF -20+80% 40V	C36	4130228	470 nF 20% 63V
C13	4130215	220 nF 20% 63V	C37	4130210	47 nF 20% 63V
C14	4200364	47 µF -10+50% 10V	C38	4010041	10 nF -20+80% 40V
L1	8020342	Coil 10 µH 10%			
BP1	8030056	455 kHz ±1kHz			
X1	8090057	Crystal 3.64 MHz			
S1	7400268	Switch 1 pol.			

PCB 13, 8002873
IR – Left

TR1	8320311	**42**	BF 240	TR2	8320095	**20**	BC 549B
D1	8330145	**244**	BPW 82	D2-D3	8330140	**203**	TSHA 5502
C1	4000057	47 pF 5% 63V		C4	4010024	470 pF 10% 63V	
C2	4010024	470 pF 10% 63V		C5	4000243	100 pF 5% 63V	
C3	4130356	100 nF 20% 63V					
L1	8020590	Coil 270 µH 10%		L2	8020590	Coil 270 µH 10%	
P35	7220447	Plug 5/5 pins					

PCB 14, 8002874
IR – Right

14TR1	8320311	**42**	BF 240	14TR2	8320095	**20**	BC 549B
14D1	8330145	**244**	BPW 82	14D2-14D3	8330140	**203**	TSHA 5502
C1	4000057	47 pF 5% 63V		C4	4010024	470 pF 10% 63V	
C2	4010024	470 pF 10% 63V		C5	4000243	100 pF 5% 63V	
C3	4130356	100 nF 20% 63V					
L1	8020590	Coil 270 µH 10%		L2	8020590	Coil 270 µH 10%	
P36	7220447	Plug 5/5 pins					

PCB 15, 8002694 Display

TR1 TR30	8320615	**51**	BC 848B				
D1-D79	8330152	**246**	LED reed	DP1-DP5	8330131		HD 1075R/P 100PA
D85-D97	8330151	**246**	LED Green				
P1	7220581		Plug 7/7 pins	P2	7220587		Plug 7/7 pins

Standard Resistors:
Resistors SMD 2% 1/8 W
SMD 5% 1/8 W

	5%	2%	2%	2%	2%	2%	5%	5%
	x1	**x10**	**x100**	**x1K**	**x10K**	**x100K**	**x1M**	**x10M**
1.0	5011623	5011647	5011218	5011227	5011241	5011256	5011267	5011730
1.1	5011624	5011648	5011669	5011681	5011689	5011694	5011707	
1.2	5011625	5011649	5011219	5011682	5011490	5011257	5011708	
1.3	5011626	5011650	5011670	5011683	5011242	5011258	5011709	
1.5	5011627	5011651	5011220	5011228	5011243	5011259	5011710	
1.6	5011628	5011652	5011671	5011684	5011690	5011695	5011711	
1.8	5011629	5011653	5011672	5011229	5011244	5011260	5011712	
2.0	5011630	5011654	5011673	5011685	5011691	5011696	5011713	
2.2	5011216	5011655	5011674	5011230	5011245	5011261	5011714	
2.4	5011634	5011656	5011675	5011686	5011246	5011697	5011715	
2.7	5011635	5011657	5011497	5011231	5011247	5011262	5011716	
3.0	5011731	5011658	5011499	5011500	5011692	5011698	5011717	
3.3	5011217	5011659	5011676	5011232	5011248	5011263	5011718	
3.6	5011636	5011660	5011677	5011687	5011249	5011264	5011719	
3.9	5011637	5011661	5011221	5011233	5011491	5011699	5011720	
4.3	5011638	5011662	5011498	5011688	5011492	5011700	5011721	
4.7	5011639	5011269	5011222	5011234	5011250	5011265	5011722	
5.1	5011640	5011663	5011678	5011235	5011493	5011701	5011723	
5.6	5011641	5011664	5011223	5011236	5011251	5011702	5011724	
6.2	5011642	5011665	5011224	5011237	5011693	5011703	5011725	
6.8	5011643	5011666	5011225	5011238	5011252	5011704	5011726	
7.5	5011644	5011667	5011679	5011239	5011253	5011705	5011727	
8.2	5011645	5011270	5011226	5011240	5011254	5011266	5011728	
9.1	5011646	5011668	5011680	5011489	5011255	5011706	5011729	

(Glue dots, approx. 200, part no. 3181932).

Resistors 5% 1/2 W

	x1	**x10**	**x100**	**x1K**	**x10K**	**x100K**	**x1M**	**x10M**
1.0		5011000	5011013	5011028	5011044	5010313	5011069	5011083
1.2	5011406	5011001	5011014	5011030	5011045	5011058	5010421	
1.5	5010727	5011002	5011015	5011031	5011046	5011059	5011071	
1.8	5010857	5010787	5011016	5011033	5011047		5011072	
2.2	5011335	5010708	5010815	5011034	5011048	5011061	5011074	
2.7		5010803	5011018	5010055	5011049	5011062	5011075	
3.3	5020803	5011007	5011019	5011037		5011063	5010381	
3.9		5010782	5011021	5010700	5011051		5010392	
4.7	5010765	5011009	5011022	5010035	5010036	5011065	5011078	
5.6		5011010	5011023	5011041		5011066	5011079	
6.8	5010874	5011011	5011024	5011042	5010810	5011067	5011080	
8.2		5011012	5011026	5011043	5010038	5011068	5011081	

Resistors 5% 1/4 W

	x1	**x10**	**x100**	**x1K**	**x10K**	**x100K**	**x1M**	**x10M**
1.0	5010592	5010506	5010065	5010040	5010059	5010049	5010054	5010638
1.2		5010595	5010128	5010153	5010046	5010047	5010665	
1.5	5011348	5010468	5010057	5010247	5010053	5010063	5010093	
1.8		5010822	5010362	5010066	5010135	5010072	5010791	
2.2	5010682	5010448	5010092	5010064	5010079	5010120	5010245	
2.7	5010925	5010403	5010000	5010298	5010141	5010083	5010431	
3.3		5010253	5010044	5010076	5010075	5010117	5010848	
3.9	5011377	5010622	5010070	5010069	5010060	5010073	5010714	
4.7	5010888	5010411	5010058	5010048	5010045	5010077	5011513	
5.6	5010706	5010151	5010067	5010041	5010061	5010071	5010658	
6.8	5010904	5010039	5010144	5010052	5010062	5010074		
8.2	5010880	5010056	5010068	5010154	5010091	5010505		

Resistors 5% 1/8 W

	x1	**x10**	**x100**	**x1K**	**x10K**	**x100K**	**x1M**	**x10M**
1.0		5011464	5011357	5010816	5010935	5011440	5011459	5020875
1.2		5011351	5011084	5011442	5011338	5011341	5011175	
1.5		5011463	5011443	5011178	5011364	5011398	5011460	
1.8			5011350	5011361	5011344	5011468		
2.2	5011032	5011376	5010886	5011353	5010833	5011369	5011342	
2.7		5011471	5011355	5011362	5011366	5011370	5011478	
3.3			5011337	5010827	5011346	5011371	5011462	
3.9		5011438	5011817	5011157	5011457	5011372	5020876	
4.7	5011363	5011038	5011441	5011363	5010937	5011343	5011611	
5.6		5011412	5011358	5010885	5011166	5011340		
6.8		5011356	5011336	5010839	5011367	5011458		
8.2		5011466	5011354	5011339	5011368	5011373		

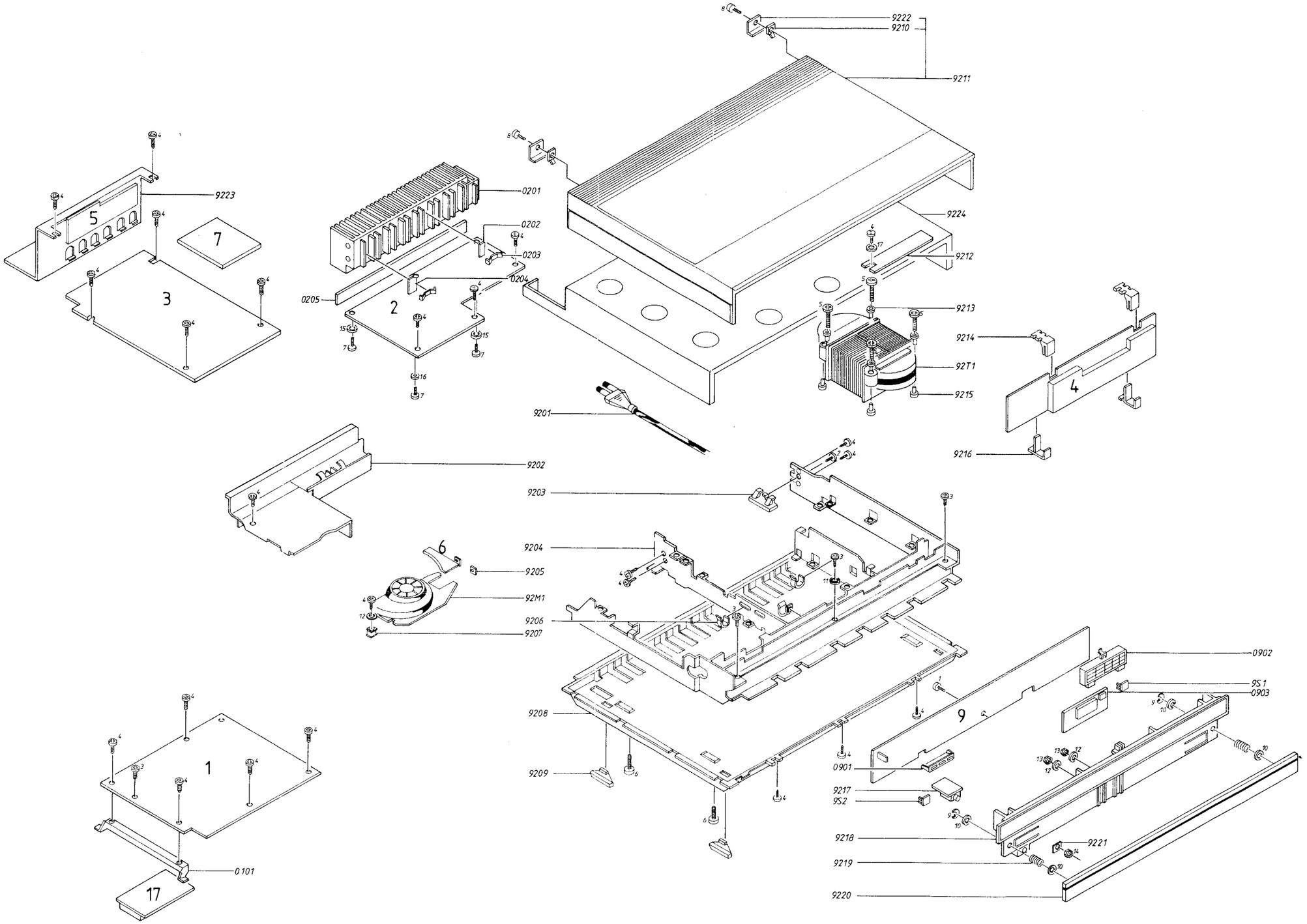
9222
9210
9211
9223
0201
0202
0203
0204
0205
9224
9212
9213
9214
92T1
9215
4
9216
9201
9202
9203
6
9204
9205
92M1
9206
9207
9208
9209
1
0101
17
0902
9S1
0903
9
0901
9217
9S2
9218
9221
9219
9220

LIST OF MECHANICAL PARTS

01 modul	8002671	PCB HF, type 2336, 2337
	8002818	PCB HF, type 2338, 2340
	8002908	PCB HF, type 2339
0101	2566047	Rail
02 modul	8002679	PCB Output and power supply
0201	2568679	Heatsink
0202	6141103	PC-Board
0203	2819175	Spring
0204	3170001	Mica sheet
0205	2560123	Rail
03 modul	8001219	PCB Preamplifier
	8001280	PCB Relay
04 modul	8001218	Microcomputer
	8001290	PCB with IC 74HCT21
05 modul	8001212	Socket panel
	7210518	Socket 8pol DIN
	7210520	Socket HT 3pol
	7210521	Socket HT 4pol
	7210558	Socket AM
	7210820	Socket FM
06 modul	8002173	PCB Fan regulation
09 modul	8001284	PCB Display
0901	3131252	Housing, display
	3370155	Tape, display
0902	3131260	Housing, programme
	3370156	Tape, programme
0903	8002683	PC-Board
9S1-9S2	7400268	Switch 1-pole
17 modul	8050093	Tuner FM
	8050102	Tuner FM, type 2339

9201	6271101	Mains cable, type 2336, 2337	9212	8002778	PCB mount. fuse type 2336, 2337, 2340
	6270380	Mains cable, type 2338		8002814	PCB mount fuse, type 2338, 2339
	6271119	Mains cable, type 2339	9213	2938154	Bushing
	6270297	Mains cable, type 2340	9214	3152341	Holder
9202	3131211	Housing for fan	9215	2938154	Bushing
9203	3152367	Cable holder	9216	3014060	Holder
9204	3454609	Frame	9217	8002680	PCB Headphones with plugs
9205	2938205	Bushing	9218	3114316	Display Housing
9206	3152366	Cable holder	9219	2812095	Spring
9207	2938206	Bushing	9220	2569178	Rail
9208	3454652	Bottom		2569202	Rail, white
9209	3035119	Rubber foot	9221	2640050	Locking plate
9210	2391059	Locking plate	9222	3034073	Locking plate
9211	3414160	Cabinet	9223	8001212	Socket panel
	3430502	Cabinet, white	9224	3114356	Inner chassis

4-2

92T1	8013354	Transformer, type 2336
	8013362	Transformer, type 2337
	8013363	Transformer, type 2338
	8013364	Transformer, type 2339
	8013365	Transformer, type 2340
92M1	8410011	Fan complete
	6276079	Main cable bundel

Survey of screws, washers etc.

1	2013118	Screw 3,0x8
2	2015094	Screw M3,5x6,5
3	2039008	Screw AM 3x6
4	2039020	Screw 3x5
5	2043003	Screw AM 4x25
6	2043020	Screw AM 4x6
7	2013089	Screw U2,9x7,9
8	2043011	Screw AM 4x8
9	2390001	Washer 2,3
10	2620020	Washer ø3,2x7
11	2625002	Washer A3,2
12	2622015	Washer ø3,2x8x0,5
13	2380011	Nut M3
14	2380145	Nut
15	2622052	Washer ø3,2x8x1
16	2622014	Washer ø3,2x6x1
17	2622041	Washer 3,2

Parts not shown

3397571	Foam packing set for Beomaster
3917098	Insert for Beomaster
3391251	Outer carton for Beomaster
3501073	Users Guide, Beosystem 6500 DK
3501074	Users Guide, Beosystem 6500 S
3501075	Users Guide, Beosystem 6500 SF
3501076	Users Guide, Beosystem 6500 GB
3501077	Users Guide, Beosystem 6500 D
3501078	Users Guide, Beosystem 6500 NL
3501079	Users Guide, Beosystem 6500 F
3501080	Users Guide, Beosystem 6500 E
3501081	Users Guide, Beosystem 6500 I
3502716	Setting up Guide, Beomaster 6500 DK
3502717	Setting up Guide, Beomaster 6500 S
3502718	Setting up Guide, Beomaster 6500 SF
3502719	Setting up Guide, Beomaster 6500 GB
3502720	Setting up Guide, Beomaster 6500 D
3502721	Setting up Guide, Beomaster 6500 NL
3502722	Setting up Guide, Beomaster 6500 F
3502723	Setting up Guide, Beomaster 6500 E
3502724	Setting up Guide, Beomaster 6500 I
3502725	Setting up Guide, Beomaster 6500 USA

4-3

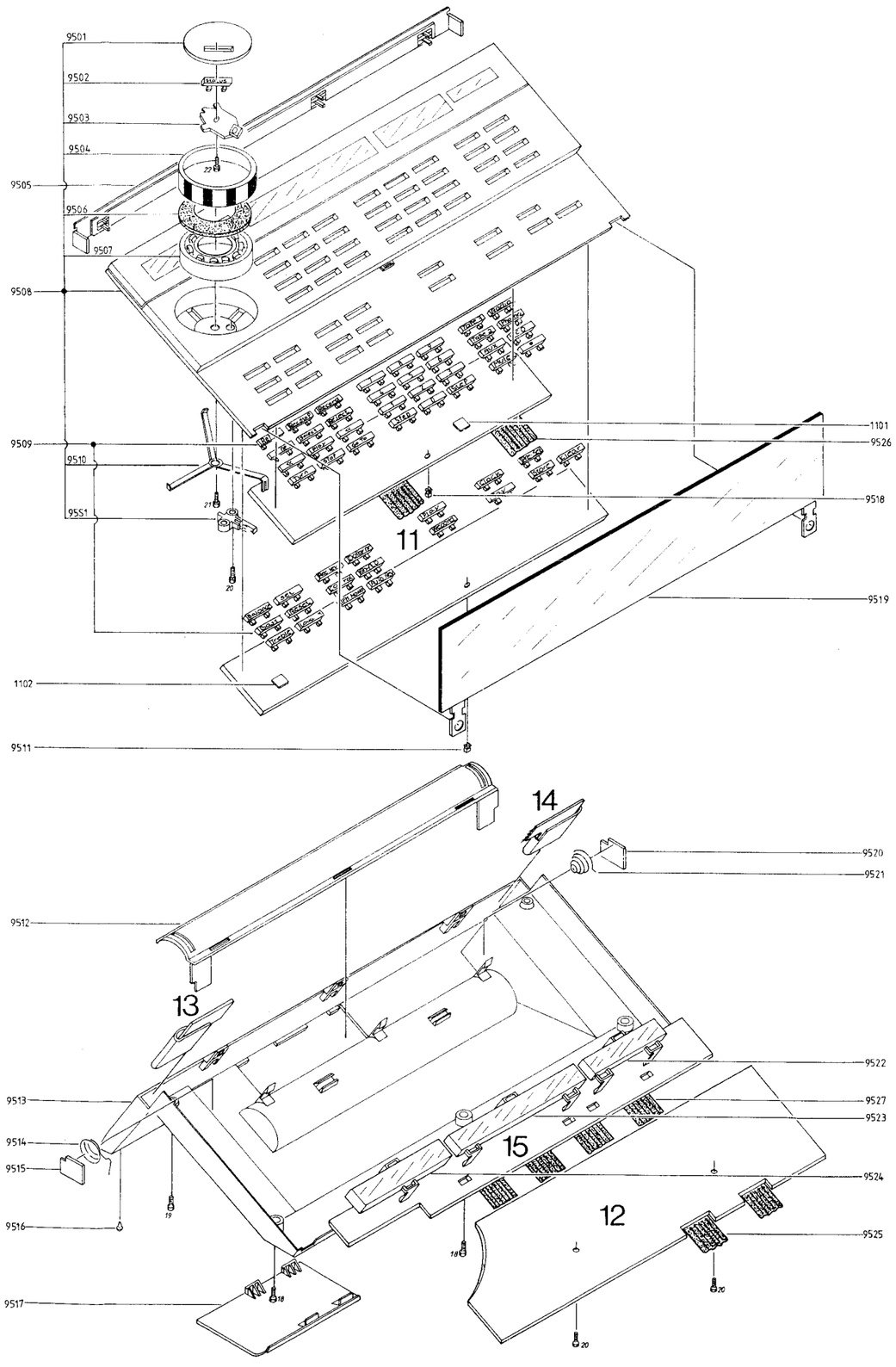

4-3

Master Control Panel, Type 1551

11Modul	8002685	PCB Keyboard			
1101	7500211	Contact spring			
1102	7500211	Contact spring			
12Modul	8002690	PCB Microcomputer			
13Modul	8002873	PCB IR - left			
14Modul	8002874	PCB IR - right			
15Modul	8002694	PCB, display			
9501	2804068	Washer, volume	9514	2818075	Spring
	2804066	Washer, volume white	9515	2805000	Screen
			9516	3010007	Rubber foot
9502	2776036	Buttons, status	9517	3164839	Battery cover
9503	8002872	PC-Board with switch		3164772	Battery cover, white
	7400336	Switch	9518	2576050	Spacer
9504	2804053	Wheel	9519	2569172	Cover
9505	3322103	IR - window		2569203	Cover, white
9506	2622405	Packing	9520	2805000	Screen
9507	2900013	Ball bearing	9521	2818074	Spring
9508	3168901	Panel complete	9522	3131253	Housing, display
	3168808	Panel complete, white	9523	3131254	Housing, programme
9509	2776081	Set of buttons	9524	3131255	Housing, volume
9510	2854125	Arm	9525	6200062	Ribbon cable
9511	2570050	Spacer	9526	6200133	Ribbon cable
9512	2952015	Holder	9527	6200128	Ribbon cable
9513	3454620	Bottom		8700015	Battery
	3454580	Bottom, white			
95S1	7400356	Switch			

Screws for MCP

18	2039027	Screw 3x6
19	2039084	Screw 3x8
20	2013118	Screw PT 3x8
21	2013080	Screw 2,9x9,5
22	2013099	Screw 2,9x6,5

Parts not shown. MCP

	3391273	Outer carton for MCP
	3397431	Foam packing set for MCP
	3391687	Insert for MCP
	3501082	Setting up Guide, MCP DK
	3501083	Setting up Guide, MCP S
	3501084	Setting up Guide, MCP SF
	3501085	Setting up Guide, MCP GB
	3501086	Setting up Guide, MCP D
	3501087	Setting up Guide, MCP NL
	3501088	Setting up Guide, MCP F
	3501089	Setting up Guide, MCP E
	3501090	Setting up Guide, MCP I

TILBEHØR
ACCESSORIES

Riaa modul 8001245

TR1	8320768	**51**	BC850B	TR4	8320769	**51**	BC849C
TR2	8320769	**51**	BC849C	TR5	8320755	**51**	BC847B
TR3	8320768	**51**	BC850B				

D1	8300482	**217**	4148

C1	4010195	2,7nF 5% 50V	C8	4010220	100nF 10% 50V
C2	4010220	100nF 10% 50V	C9	4000319	150pF 5% 50V
C3	4000319	150pF 5% 50V	C10	4010167	2,7nF 10% 100V
C4	4010167	2,7nF 10% 100V	C11	4130220	10nF 5% 63V
C5	4130220	10nF 5% 63V	C12	4000286	470pF 5% 50V
C6	4000286	470pF 5% 50V	C13	4010173	4,7nF 10% 50V
C7	4010195	2,7nF 5% 50V	C14	4000290	22nF 10% 50V

P1	7220883	Plug 7pol.

STAND 6500, type 2095

9001	3458744	Top
9002	3454672	Plate, bottom
9003	2570073	Tube
9004	2570074	Tube stand
9005	3454671	Foot
9006	2938275	Bushing
9007	2938275	Bushing

Parts not shown

3397709	Foam packing
3392135	Folie
3390419	Screws

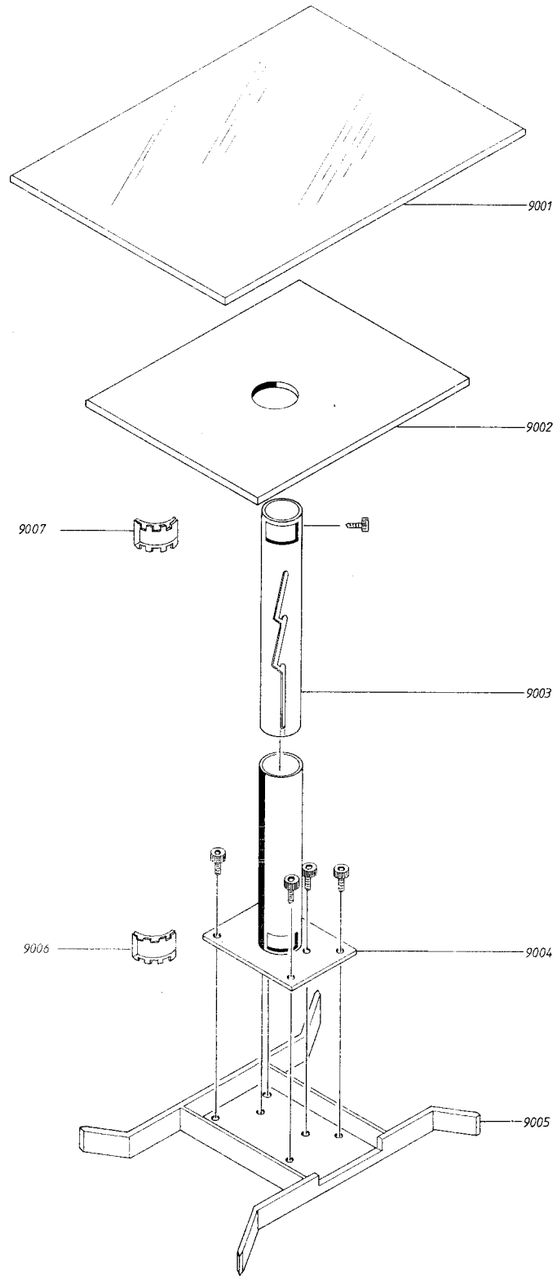

5-1

5-1

Bang & Olufsen

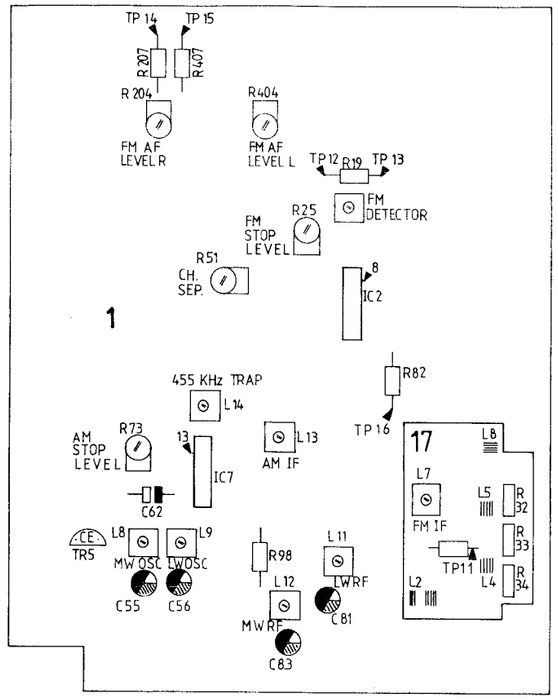

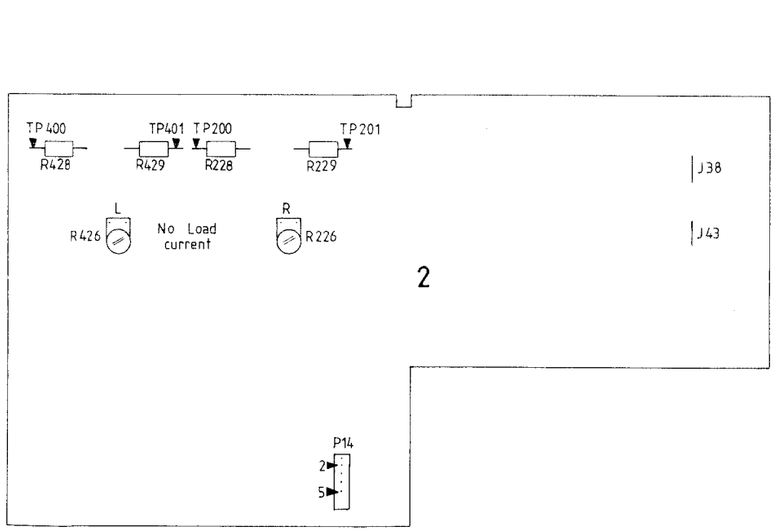

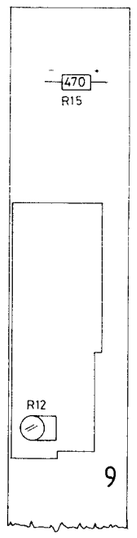

ELEKTRISKE JUSTERINGER

Henvisningerne er for højre kanal. (Henvisningerne i parantes er for venstre kanal).
Alle betjeninger gøres på Master Control Panelet.

5V Netdel

Tilslut DC voltmeter til 2P14-5.
Juster til 5,1V±0,1V ved at afbryde eller kortslutte 2J38 og 2J43.

Tomgangsstrøm

Tomgangsstrømmen justeres medens modtageren er kold og med neddrejet volumekontrol.
Højttalere må ikke være tilsluttet.
Tilslut DC voltmeter mellem 2TP200 og 2TP201 (2TP400 og 2TP401).
Juster 2R226 (2R426) til 11mV.

Brightness (Display)

Tilslut DC voltmeter over 9R15.
Tryk AUX.
Juster 9R12 til 3,75V.

Strømforsyning (MCP)

Kortslut 12TP3 til stel.
Tilslut et DC voltmeter til kollektor på 12TR37.
Juster 12R117 til 4,75V.

Volume sensor (MCP)

Tilslut DC voltmeter til ben 2 på 12IC2.
Når volume hjulet drejes skal spændingen svinge minimum mellem 2V og 2,8V.
Eventuel justering kan gøres ved at klippe eller lodde 12R23, 12R25 eller 12J57.

ELECTRICAL ADJUSTMENTS

Instructions apply to the right channel. (Instructions given in brackets apply to the left channel). All operations are carried out from the Master Control Panel.

5V Power-supply unit

Connect DC voltmeter to 2P14-5.
Adjust to 5.1V ± 0.1V by disconnecting or short-circuiting 2J38 and 2J43.

No-load current

Adjust the no-load current while the receiver is cold and with the volume control turned down.
Speakers must not be connected.
Connect DC voltmeter between 2TP200 and 2TP201 (2TP400 and 2TP401).
Adjust 2R226 (2R426) to 11mV.

Brightness (Display)

Connect DC voltmeter across 9R15.
Press AUX.
Adjust 9R12 to 3.75V.

Power supply (MCP)

Short-circuit 12TP3 with chassis.
Connect a DC voltmeter to the collector at 12TR37.
Adjust 12R117 to 4.75V.

Volume sensor (MCP)

Connect DC voltmeter to pin 2 at 12IC2.
When the volume wheel is turned, the voltage should oscillate between 2V and 2.8V as a minimum.
Any adjustments which might be necessary may be performed by cutting or soldering 12R23, 12R25 or 12J57.

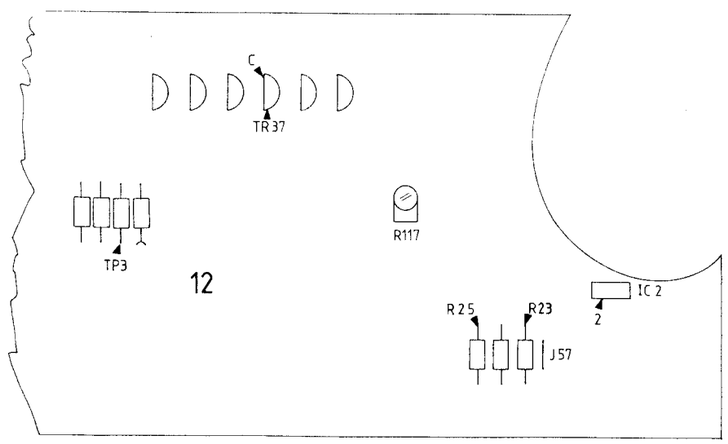

HF JUSTERINGER

Ved visse justeringere skal AFT'en være in-aktiv. Dette ses ved at LOCKED indikaatoren skal være slukket (LOCKED off). Ved justeringer uden AFT skal signalgeneratoren først tilsluttes, når modtagerens frekvens er indstillet.

Alle betjeninger gøres på Master Control Panelet.

Udskiftning på FM tuner

Ved udskiftning af FM tuner er det kun nøvendigt at justere MF spolen 17L7.

MF

Tilslut et oscilloskop til 1IC2 ben 8.
Tryk RADIO.
Tryk GO TO.
Tryk TURN til displayet viser 87.4.
Tilslut en sweepgenerator til antenneindgangen og indstil den til 87,4 MHz.
Juster 17L7 til maksimum og symmetrisk MF kurve.

TUNER JUSTERINGER (KUN HVIS TUNEREN ER MISJUSTERET)

Oscillator

Der skal ikke tilføjes signal.
Tilslut DC voltmeter mellem 17TP11 og ben 8 på tuneren.
Tryk RADIO.
Tryk GO TO.
Tryk TURN til displayet viser 87,4.
Juster 17L8 til 0V.

HF 87,4 MHz

Tilslut et oscilloskop til 1IC2 ben 8.
Tryk RADIO.
Tryk GO TO.
Tryk TURN til displayet viser 87,4.
Tilslut en sweepgenerator til antenneindgangen og indstil den til 87,4 MHz.
Juster 17L2, 17L4, 17L5 og 17L7 til maksimum og symmetrisk MF kurve.

HF 108 MHz

Tryk GO TO.
Tryk 1080.
Når displayet slukker, tryk GO TO (LOCKED off).
Sweepgeneratorens frekvens ændres til 108 MHz.
Juster 17R32, 17R33 og 17R34 til maksimum.

Detektor

Tilslut oscilloskop til 1IC2 ben 8.
Tilslut DC voltmeter over 1R19 (1TP12 og 1TP13).
Tryk RADIO.
Tryk GO TO.
Tryk TURN til displayet viser 87,4.
Tryk GO TO.
Tryk 940.
Når displayet slukker, tryk GO TO (LOCKED off).

RF ADJUSTMENTS

The AFT needs to be inactive for certain adjustments. This is shown by the LOCKED indicator being off (LOCKED off). When adjustments are made without the AFT, the signal generator should not be connected until the frequency of the receiver has been set.

All operations are carried out from the Master Control Panel.

Replacement of FM tuner

When replacing an FM tuner, it is only necessary to adjust the IF coil 17L7.

IF

Connect an oscilloscope to 1IC2 pin 8.
Press RADIO.
Press GO TO.
Press TURN until the display shows 87.4.
Connect a sweep generator to the aerial input and adjust it to 87.4 MHz.
Adjust 17L7 to maximum and symmetrical IF curve.

TUNER ADJUSTMENT (ONLY IF TUNER IS MALADJUSTED)

Oscillator

Do not input a signal.
Connect DC voltmeter between 17TP11 and the tuner's pin 8.
Press RADIO.
Press GO TO.
Press TURN until the display shows 87.4.
Adjust 17L8 to 0V.

RF 87.4 MHz

Connect an oscilloscope to 1IC2 pin 8.
Press RADIO.
Press GO TO.
Press TURN until the display shows 87.4.
Connect a sweep generator to the aerial input and adjust it to 87.4MHz.
Adjust 17L2, 17L4, 17L5 and 17L7 to maximum and symmetrical IF curve.

RF 108 MHz

Press GO TO.
Press 1080.
When the display goes off, press GO TO (LOCKED off).
Change sweep generator frequency to 108MHz.
Adjust 17R32, 17R33 and 17R34 to maximum.

Detector

Connect oscilloscope to 1IC2 pin 8.
Connect DC voltmeter across 1R19 (1TP12 and 1TP13).
Press RADIO.
Press GO TO.
Press TURN until the display shows 87.4.
Press GO TO.
Press 940.
When the display goes off, press GO TO (LOCKED off).

Tilslut en målesender til antenneindgangen og indstil den til 94 MHz.
Finindstil målesenderens frekvens til minimum 2. harmonisk forvrængning af signalet, som vist på kurven.

Connect a signal generator to the aerial input and adjust it to 94MHz.
Fine-tune the signal generator to at least second harmonic distortion of the signal as indicated on the curve.

RIGTIG CORRECT

FORKERT INCORRECT

Juster 1L2 så tæt mod 0V DC som muligt.
NB! Spændingen over 1R19 vil hele tiden variere p.g.a. korrektionspulser fra mikrocomputeren.
Efter detektor justering indstil FM DISPLAY INDIKERING se afsnit 8.

Adjust 1L2 as close to 0V DC as possible.
NOTE! The voltage across 1R19 will vary continuously because of correction pulses from the microcomputer.
After adjustment of the detector, adjust the FM DISPLAY INDICATION, see section 8.

FM LF output

Tilslut en målesender til antenneindgangen og indstil den til mono, 94MHz, 1mV EMF, Δ±75 kHz.
Tilslut LF voltmeter til 1TP14 (1TP15).
Tryk RADIO.
Tryk GO TO.
Tryk TURN til displayet viser 87,5.
Tryk GO TO.
Tryk 940.
Juster 1R204 (1R404) til 1V RMS.
(Type 2333 justeres til 700mV RMS).

FM AF output

Connect a signal generator to the aerial input and adjust it to mono, 94MHz, 1mV EMF, Δ ± 75kHz.
Connect AF voltmeter to 1TP14 (1TP15).
Press RADIO.
Press GO TO.
Press TURN until the display shows 87.5.
Press GO TO.
Press 940.
Adjust 1R204 (1R404) to 1V R.M.S.(Adjust type 2333 to 700mV R.M.S.)

Kanalseparation

Tilslut en stereokoder (Encoder) til antenneindgangen og indstil den til 94 MHz og umoduleret signal i den ene kanal.
Tilslut LF voltmeter til 1TP14 eller 1TP15 (den umodulerede kanal).
Tryk RADIO.
Tryk GO TO.
Tryk TURN til displayet vises 87,5.
Tryk GO TO.
Tryk 940.
Juster 1R51 til minimum signal i den umodulerede kanal.
Tilslut LF voltmeter til den anden kanal, og indstil stereokoderen til umoduleret signal i den samme kanal.
Kontroller, juster til symmetrisk kanalseparation.

Channel separation

Connect a stereo encoder to the aerial input and adjust it to 94MHz and unmodulated signal in one channel.
Connect AF voltmeter to 1TP14 or 1TP15 (the unmodulated channel).
Press RADIO.
Press GO TO.
Press TURN until the display shows 87.5.
Press GO TO.
Press 940.
Adjust 1R51 to minimum signal in the unmodulated channel.
Connect AF voltmeter to the other channel, and adjust the stereo encoder to unmodulated signal in the same channel.
Check, adjust to symmetrical channel separation.

FM stop niveau

Tilslut en målesender til antenneindgangen, og indstil den til 94MHz, 20µV EMF, Δ±75 kHz.
Tryk RADIO.
Tryk GO TO.
Tryk TURN til displayet visere 87,5.
Tryk GO TO.
Tryk 940.
Drej 1R25 mod uret til stop.
Drej 1R25 med uret til LOCKED indikatoren netop tænder.

FM stop level

Connect a signal generator to the aerial input, and adjust it to 94MHz, 20µV EMF, Δ ±75kHz.
Press RADIO.
Press GO TO.
Press TURN until the display shows 87.5.
Press GO TO.
Press 940.
Turn 1R25 anticlockwise to stop.
Turn 1R25 clockwise until the LOCKED indicator just goes on.

AM

For at undgå indvirkning fra ACC'en, anbefales det at kortslutte 1C62.

LW oscillator

Der skal ikke tilføres signal.
Tilslut DC voltmeter til 1TP16.
Tryk RADIO.
Tryk GO TO.
Tryk TURN til frekvensdisplayet viser 150.
Juster 1L9 til 2V±0,25V.
Tryk GO TO
Tryk 350.
Juster 1C56 til 25V±0,5V
Gentag evt. proceduren.

MW oscillator

Der skal ikke tilføres signal.
Tilslut DC voltmeter til 1TP16.
Tryk RADIO.
Tryk GO TO.
Tryk TURN til frekvensdisplayet viser 150.
Tryk GO TO.
Tryk 520.
Juster 1L8 til 2V±0,25V.
Tryk GO TO.
Tryk 1610.
Juster 1C55 til 25V±0,5V.
Gentag evt. proceduren.

AM MF

Tilslut en sweepgenerator til antenneindgangen, og indstil den til centerfrekvens 455 kHz △10 kHz.
Tilslut et oscilloskop til 1IC7 ben 13.
Tryk RADIO.
Tryk GO TO.
Tryk TURN til frekvensdisplayet viser 150.
Tryk GO TO.
Tryk 1500.
Kortslut 1R98.
Juster 1L13 og 1L14 til maksimum og symmetrisk MF kurve.
Kortslutningen over 1R98 fjernes.

ANTENNEKREDSE
MW antennekredsene **skal** justeres først.

MW

Tilslut en målesender til antenneindgangen, og indstil den til 1500 kHz, 30% modulation.
Tilslut oscilloskop eller LF voltmeter til 1IC7 ben 13.
Tryk RADIO.
Tryk GO TO.
Tryk TURN til frekvensdisplayet viser 150.
Tryk GO TO.
Tryk 1500.
Juster 1C83 til maksimum output.
Målesenderens frekvens ændres til 575 kHz.
Tryk GO TO.
Tryk 575 kHz.
Juster 1L12 til maksimum output.
Gentag evt. proceduren.

AM

In order to avoid any kind of influence from the AGC, it is recommended that 1C62 be short-circuited.

LW oscillator

Do not input a signal.
Connect DC voltmeter to 1TP16.
Press RADIO.
Press GO TO.
Press TURN until the frequency display shows 150.
Adjust 1L9 to 2V ± 0.25V.
Press GO TO.
Press 350.
Adjust 1C56 to 25V ± 0.5V.
Repeat this procedure if necessary.

MW oscillator

Do not input a signal.
Connect DC voltmeter to 1TP16.
Press RADIO.
Press GO TO.
Press TURN until the frequency display shows 150.
Press GO TO.
Press 520.
Adjust 1L8 to 2V ± 0.25V.
Press GO TO.
Press 1610.
Adjust 1C55 to 25V ± 0.5V.
Repeat this procedure if necessary.

AM IF

Connect a sweep generator to the aerial input, and adjust it to centre frequency, 455 kHz △ 10 kHz.
Connect an oscilloscope to 1IC7 pin 13.
Press RADIO.
Press GO TO.
Press TURN until the frequency display shows 150.
Press GO TO.
Press 1500.
Short-circuit 1R98.
Adjust 1L13 and 1L14 to maximum and symmetrical IF curve.
Remove the short-circuit across 1R98.

AERIAL CIRCUITS
The MW aerial circuits must be adjusted first.

MW

Connect a signal generator to the aerial input, and adjust it to 1500 kHz, 30% modulation.
Connect oscilloscope or AF voltmeter to 1IC7 pin 13.
Press RADIO.
Press GO TO.
Press TURN until the frequency display shows 150.
Press GO TO.
Press 1500.
Adjust 1C83 to maximum output.
Signal generator frequency is changed to 575 kHz.
Press GO TO.
Press 575 kHz.
Adjust 1L12 to maximum output.
Repeat this procedure if necessary.

LW

Målesenderens freksens ændres til 330 kHz.
Tryk GO TO.
Tryk 330.
Juster 1C81 til maksimum output.
Målesenderens frekvens ændres til 160 kHz.
Tryk GO TO.
Tryk 160.
Juster 1L11 til maksimum output.
Gentag evt. proceduren.

AM stop niveau

Kortslutninger over 1C62 fjernes.
Tilslut en målesender til antenneindgangen, og indstil den til 1MHz 30% modulation, og 30 µV.
Tilslut DC voltmeter til kollektor på 1TR5.
Tryk RADIO.
Tryk GO TO.
Tryk TURN til frekvensdisplayet viser 150.
Tryk GO TO.
Tryk 1000.
Juster 1R73 til 2,5 V.

LW

The signal generator frequency is changed to 330 kHz.
Press GO TO.
Press 330.
Adjust 1C81 to maximum output.
Change the signal generator frequency to 160 kHz.
Press GO TO.
Press 160.
Adjust 1L11 to maximum output.
Repeat this procedure if necessary.

AM stop level

Remove the short-circuit across 1C62.
Connect a signal generator to the aerial input, and adjust it to 1MHz 30% modulation, and 30µV.
Connect DC voltmeter to the collector at 1TR5.
Press RADIO.
Press GO TO.
Press TURN until the frequency display shows 150.
Press GO TO.
Press 1000.
Adjust 1R73 to 2.5V.

Adskillelse

Dismantling

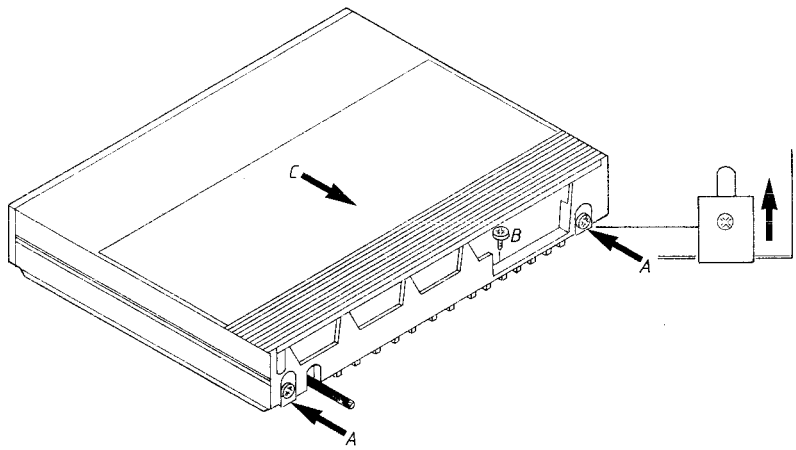

Kabinet
- Løsn skruerne, skub op og stram.
- Løft kølegitteret og fjern skruen i stikmodulet.
- Pres kabinettet ca. 1 cm bagud og løft op.

Cabinet
- Loosen the screws, push up and tighten.
- Lift the heat dissipation grill and remove the screw from the socket module.
- Push the cabinet approx. 1 cm backwards and lift it out.

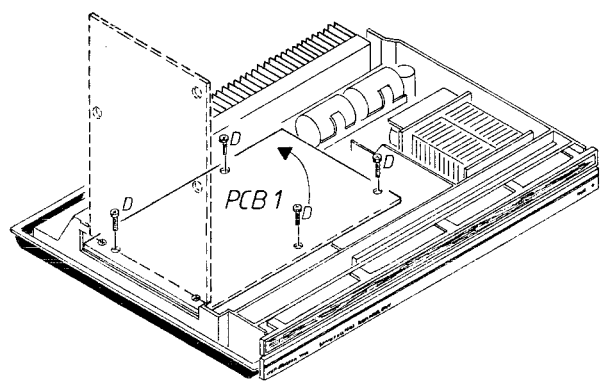

PCB 1
- Fjern skruerne D (4 stk.).
- Placer PCB 1 i servicestilling som vist.

PCB 1
- Remove the screws D (4 pcs.).
- Place PCB 1 in service position as shown.

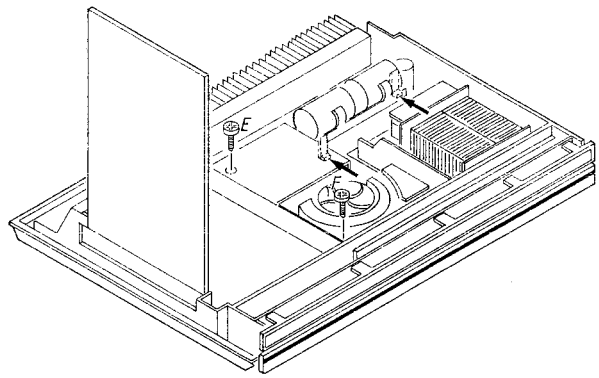

Hus og blæser
- Fjern skruen E.
- Frigør de to plasttappe (ved pilene).
- Huset afmonteres.
- Skruen F fjernes.
- Blæseren løftes of.

Housing and fan
- Remove the screw E.
- Disengage the two plastic pins (at the arrows).
- Dismantle the housing.
- Remove the screw F.
- Lift out the fan.

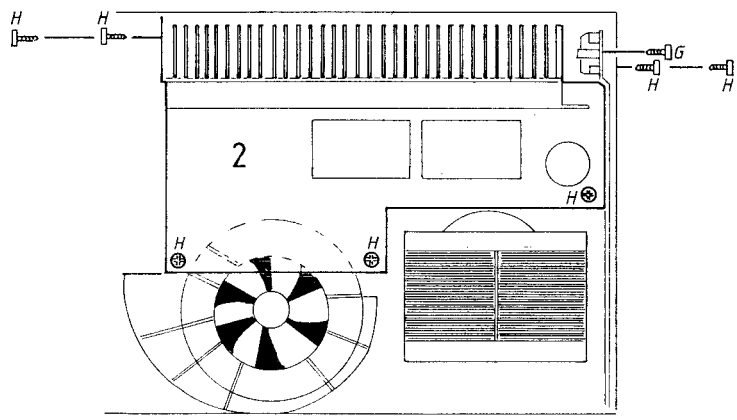

PCB2
- Afmonter hus.
- Fjern skruen G.
- Afmonter ledningsholderen.
- Fjern skruerne H (7 stk).
- Løft PCB2 og træk det ud.

PCB2
- Remove housing.
- Remove the screw G.
- Remove the cable holder.
- Remove the screws H (7 pcs.).
- Lift PCB2 and pull it out.

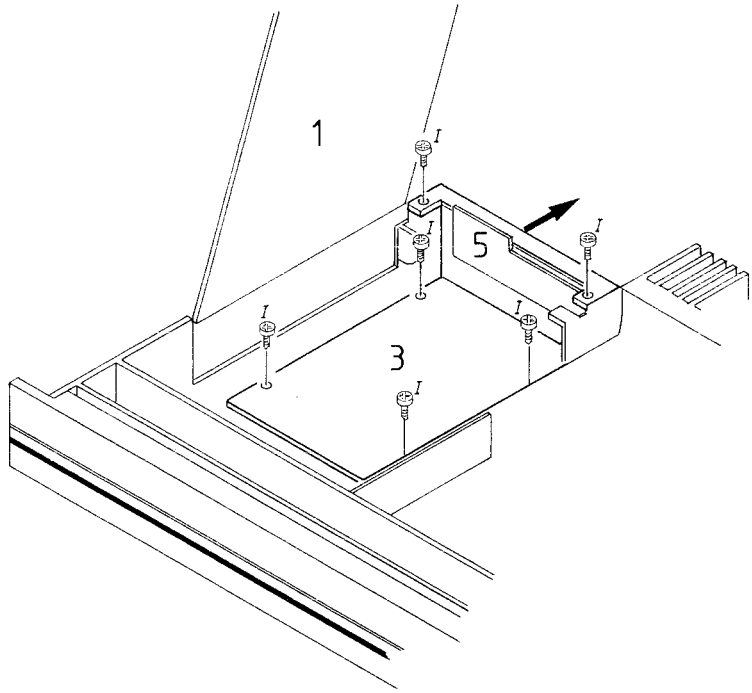

PCB3 og stikmodul
- Fjern skruerne I (6 stk.).
- Løft stikmodulet og træk.
- Træk PCB3 ud.

PCB3 and socket module
- Remove the screws I (6 pcs.).
- Lift the socket module and pull.
- Pull out PCB3.

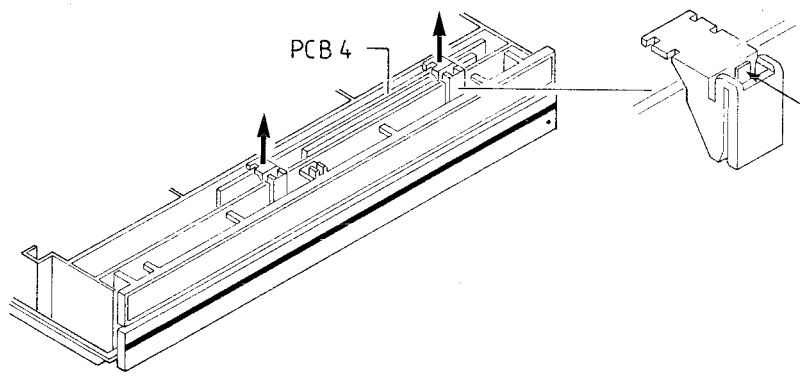

PCB4
- De to viste plastholdere løsnes og løftes op.
- PCB4 trækkes op.

PCB4
- Loosen and lift out the two plastic holders as shown.
- Pull out PCB4.

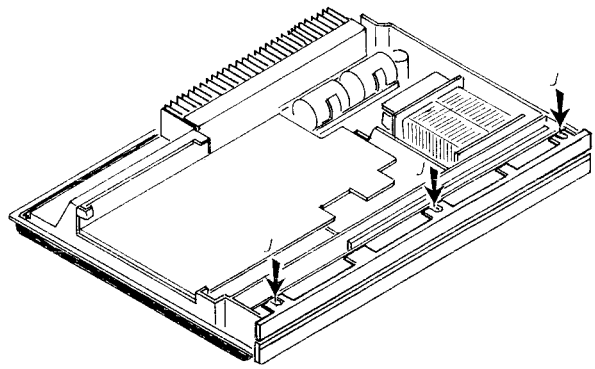

PCB 9
- Fjern skruerne J (3 stk.).
- Løft displayet.

PCB 9
- Remove the screws J (3 pcs.).
- Lift the display.

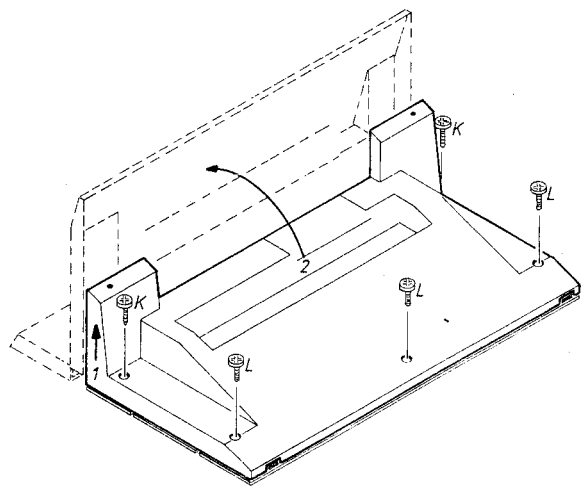

MCP
A. Fjern skruerne K og L i bunden.
Løft op og vip bunden frem.

MCP
A. Remove the screws K and L from the bottom.
Lift up and tilt the bottom forwards.

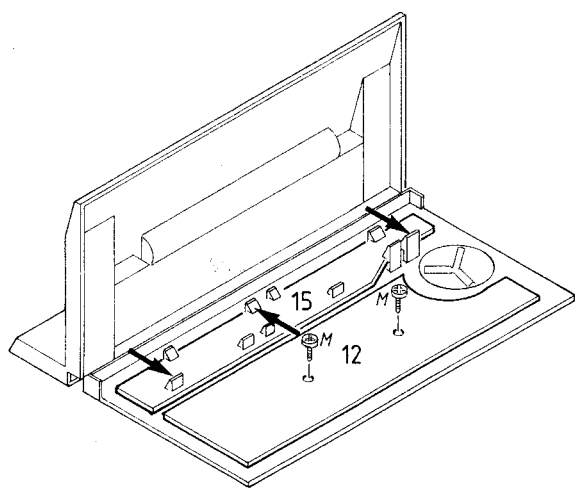

B. PCB12 og PCB15.
- Løsn de tre plasttappe og de 2 skruer M.

Printene kan nu vippes op.

B. PCB12 and PCB15.
- Loosen the three plastic tags and the 2 screws M.

The PCB's may now be tipped up.

REPARATIONSTIPS

REPAIR TIPS

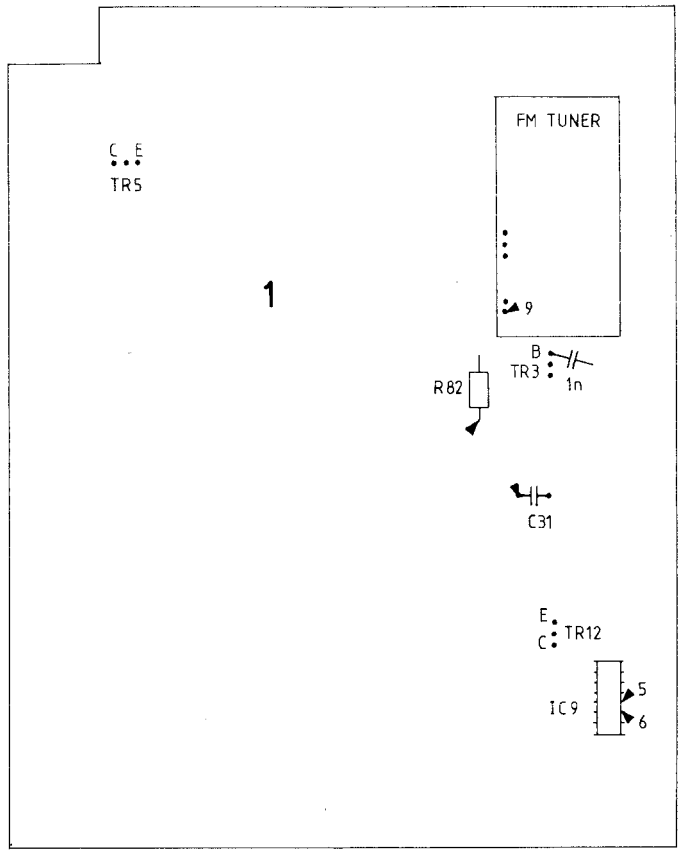

Reparation i tuningssystemet

Ved reparation i tuningssystemet kan det være vanskeligt at lokalisere en fejl.
Følgende servicetips kan benyttes til at »åbne sløjfen« mellem mikrocomputeren og resten af tunings-systemet.
Alle betjeninger gøres på Master Control Panelet.

1. Neddeler af oscillatorfrekvens:

Kortslut kollektor og emitter på 1TR5. Ben 9 på tuneren suges fri for tin, så der ikke er forbindelse til loddeøen.
Tilslut en målesender til basis på 1TR3 via en 1nf kondensator.
Indstil målesenderen til FM, og en frekvens på f.eks. 100,7 MHz, output større end 15mV.
Tryk RADIO.
Tryk GO TO.
Tryk TURN til frekvensdisplayet viser 87,4.
Tryk GO TO.
Tryk STEP>.
MCP'ens frekvensdisplay skal nu vise en frekvens, der er 10,7MHz under målesenderens frekvens, i dette tilfælde 90MHz.
Frekvensdeleren deler med 400.
Kortslutningen fjernes.

Repairs in the tuning system.

When carrying out tuning system repairs, it may be difficult to localize a fault. The following service tips may be used for "opening the loop" between the microcomputer and the rest of the tuning system.
All operations are carried out from the Master Control Panel.

1. Oscillator frequency divider:

Short-circuit collector and emitter at 1TR5. Remove all solder from tuner pin 9 so that there is no connection to the soldering point.
Connect a signal generator to the base of 1TR3 via a 1nF capacitor.
Set the signal generator to FM and a frequency of, for example, 100.7MHz, the output being greater than 15mV.
Press RADIO.
Press GO TO.
Press TURN until the frequency display shows 87.4.
Press GO TO.
Press STEP>.
The MCP frequency display will now show a frequency which is 10.7MHz less than the frequency of the signal generator, i.e., 90MHz in this example.
The frequency divider divides by 400.
Remove the short-circuit.

2. Korrektion af afstemningsspænding:

Ben 9 på tuneren suges fri for tin, så der ikke er forbindelse til loddeøen.
Tilslsut en målesender til basis på 1TR3 via en 1nF kondensator.
Indstil målesenderen til FM, 100,7MHz, output større end 15mV.
Tilslut et oscilloskop til 1IC9 ben 5 og ben 6.
Tilslut et DC voltmeter til kollektoren på 1TR12.
Tryk RADIO.
Tryk GO TO.
Tryk TURN til frekvensdisplayet viser 87,5.
Tryk GO TO.
Tryk 900.
Når frekvensdisplayet slukkes, tryk GO TO.
Målesenderens frekvens reguleres langsomt op.
Dette opfattes som oscillatordrift mod højere frekvens af mikrocomputeren, som så skal sende positive korrektionspulser til 1IC9 ben 5.
Reguleres der ned for målesenderens frekvens, i forhold til 100,7 MHz, skal mikrocomputeren sende positive korrektionspulser til 1IC9 ben 6.
Opregulering af frekvensen skal give faldende spænding på DC voltmeteret.
Nedregulering af frekvensen skal give stigende spænding på DC voltmeteret.

3. FM oscillator og HF:

1R82 løftes (den side af 1R82 som vender mod 1C32 loddes fra).
En variabel DC strømforsyning tilsluttes med + til den fraloddede side af 1R82, og indstilles til 0V.
Tilslut en målsender til FM antenneindgangen.
Indstil senderen til 88MHz.
Tryk RADIO.
Tryk GO TO.
Tryk TURN til frekvensdisplayet viser 87,5.
Tryk GO TO.
Tryk 880.
Når frekvensdisplayet slukker, tryk GO TO.
DC strømforsyningen skrues langsomt op, og når modtageren »fanger« 88MHz skal spændingen være ca. 4V.
Målesenderens frekvens ændres til 107 MHz.
Strømforsyningen skrues op, og når modtageren »fanger« frekvensen skal spændingen være ca. 19V.

4. AM oscillator og HF:

1R82 løftes (den side af 1R82 som vender mod 1C32 loddes fra).
En variabel DC strømforsyning tilsluttes med + til den fraloddede side af 1R82, og indstilles til 0V.
Tilslut en målesender til AM antenneindgangen.
Indstil senderen til 150kHz.
Tryk RADIO.
Tryk GO TO.
Tryk TURN til frekvensdisplayet viser 150.
DC strømforsyningen skrues langsomt op, og når modtageren »fanger« 150kHz skal spændingen være ca. 2V.

2. Correction of tuning voltage:

Remove all solder from tuner pin 9 so that there is no connection to the soldering point.
Connect a signal generator to the base of 1TR3 via a 1nF capacitor.
Set the signal generator to FM, 100.7MHz, output greater than 15mV.
Connect an oscilloscope to 1IC9 pins 5 and 6.
Connect a DC voltmeter to the collector of 1TR12.
Press RADIO.
Press GO TO.
Press TURN until the frequency display shows 87.5.
Press GO TO.
Press 900.
When the frequency display goes off, press GO TO.
Increase the signal generator frequency slowly.
The microcomputer understands this as oscillator drift towards higher frequency, and it therefore has to send positive correction pulses to 1IC9 pin 5.
If the signal generator frequency is decreased compared to 100.7MHz, the microcomputer has to send positive correction pulses to 1IC9 pin 6.
A frequency increase should result in decreasing voltage on the DC voltmeter.
A frequency decrease should result in increasing voltage on the DC voltmeter.

3. FM oscillator and RF:

Lift 1R82 (desolder the side of 1R82 facing 1C32).
Connect a variable DC power supply with + at the desoldered side of 1R82, and adjust to 0V.
Connect a signal generator to the FM aerial input.
Set the generator to 88MHz.
Press RADIO.
Press GO TO.
Press TURN until the frequency display shows 87.5.
Press GO TO.
Press 880.
When the frequency display goes off, press GO TO.
Turn up the DC power supply slowly, and when the receiver "catches" 88MHz the voltage should be approx. 4V.
The signal generator frequency is changed to 107MHz.
Turn up the power supply, and when the receiver "catches" the frequency the voltage should be approx. 19V.

4. AM oscillator and RF:

Lift 1R82 (desolder the side of 1R82 facing 1C32).
Connect a variable DC power supply with + at the desoldered side of 1R82, and adjust to 0V.
Connect a signal generator to the AM aerial input.
Set the generator to 150kHz.
Press RADIO.
Press GO TO.
Press TURN until the frequency display shows 150.
Turn up the DC power supply slowly, and when the receiver "catches" 150kHz the voltage should be approx. 2V.

Målesenderens frekvens ændres til 350 kHz.
Strømforsyningen skrues op, og når modtageren »fanger« frekvensen skal spændingen være ca. 25V.
Samme procedure kan benyttes i mellembølgeområdet:
520 kHz spænding ca. 2V.
1610 kHz spænding ca. 25V.

The signal generator frequency is changed to 350kHz.
Turn up the power supply, and when the receiver "catches" the frequency the voltage should be approx. 25V.
The same procedure may be followed in the medium wave range:
520 kHz voltage approx. 2V.
1610 kHz voltage approx. 25V.

Testpunkter i Master Control Panel (MCP)

MCP'en har 4 testpunkter, som kan anvendes ved service:

Test points in the Master Control Panel (MCP)

The MCP has four test points which may be used when servicing:

»CONTINUE« 12TP1

Hvis 12TP1 kortsluttes kortvarigt til 4,75V vil senderen sende et signal med et puls/pause forhold på 200µs/3,1ms.
Senderen slukkes ved at trykke på en knap.

"CONTINUE" 12TP1

If 12TP1 is short-circuited briefly to 4.75V, the transmitter will transmit a signal with a pulse/pause ratio of 200µs/3.1ms.
The transmitter is switched off by pressing a button.

»DISPLAY ON« 12TP2

»DISPLAY ON« anvendes hvis man ønsker at holde på display billedet.
Tryk på en knap for det ønskede display billede. Når displayet er tændt, kortsluttes 12TP2 til stel og MCP'en vendes væk fra Beomasteren, så MCP'en ikke modtager »stopordre« fra Beomasteren.
Displayet fastholdes til der trykkes på en knap.

"DISPLAY ON" 12TP2

"DISPLAY ON" is used when it is desirable to hold the display picture.
Press a button for the desired display picture.
When the display is on, short-circuit 12TP2 to chassis, and turn the MCP away from the Beomaster so that the MCP will not receive a "stop order" from the Beomaster.
The display is held until a button is pressed.

»SUPPLY CONSTANT ON« 12TP3

Når 12TP3 kortsluttes til stel, tændes netdelen.
Netdelen slukker igen når kortslutningen fjernes.

"SUPPLY CONSTANT ON" 12TP3

When 12TP3 is short-circuited to chassis, the power-supply unit is switched on. The power-supply unit switches off again when the short-circuit is removed.

»BATTERY SENSOR« 12TP4

Når 12TP4 kortsluttes, afprøves battery sensor funktionen.
Tryk på en knap. Når displayet er tændt, kortsluttes 12TP4 til stel, og displayet skal blinke.

"BATTERY SENSOR" 12TP4

When 12TP4 is short-circuited, the battery sensor function is tested.
Press a button. When the display is on, short-circuit 12TP4 to chassis, and the display should flash.

TESTFUNKTIONER

Bring Beomaster 6500 i »TESTMODE« på følgende måde:

- Tast RADIO
- Kortslut 4TP1 (kortvarigt)

Der kan nu vælges mellem nedenstående testprocedurer ved at sende de tilhørende cifferkommandoer fra enten Master Control Panelet eller en Beolink terminal.

TEST FUNCTIONS

Bring the Beomastser 6500 into "TESTMODE" in the following way:

- Press RADIO
- Short-circuit 4TP1 (briefly)

It is now possible to choose among the below-mentioned test procedures by transmitting the relevant digital commands from either a Master Control Panel or a Beolink terminal.

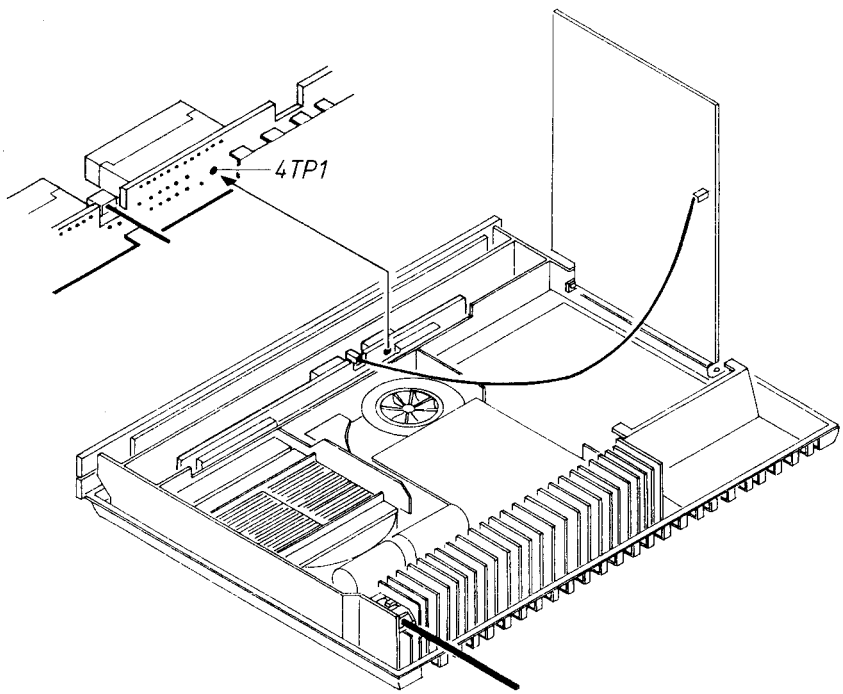

Oversigt over testfunktioner:

3 Stataus over tuner-variant
4 Stattus over software-version
5 ROM/RAM-test
6 LED-test
7 Sletning af RAM
13 IR-sender
16 Sletning af AM/FM offset-værdi

Generel regel for testfuntioner:

Hvis ikke andet er beskrevet, viser Beomasterens display:

88 for 'OK'
-- for 'Error'

Tast stand-by eller tag netstikkete ud for at forlade »TESTMODE«.

Summary of test functions:

3 Status of tuner model
4 Status of software version
5 ROM/RAM test
6 LED test
7 Erasure of RAM
13 IR transmitter
16 Erasure of AM/FM offset value.

General rule applying to test functions:

Unless otherwise specified, the Beomaster will display:

88 for "OK"
-- for "Error"

Press stand-by or disconnect the mains plug to leave "TESTMODE".

3 Stataus over tuner-variant

- Sæt Beomasteren i »TESTMODE«.
- Tryk [3].

Display: 0 = Europa (type 2336, 2337)
- FM 87,5 – 108 MHz, efterbetoning 50 µS
- AM 150 – 350 kHz, 520 – 1610 kHz, frekvensstep 9 kHz

1 = USA, Canada (type 2338)
- FM 87,5 – 108 MHz, efterbetoning 75 µS
- AM 520 – 1610 kHz, frekvensstep 10 kHz

2 = Japan (type 2339)
- FM 76 – 90 MHz, efterbetoning 50 µS
- AM 520 – 1610 kHz, frekvensstep 9 kHz

3 = Australien (type 2340)
- FM 87,5 – 108 MHz, efterbetoning 50 µS
- AM 520 – 1610 kHz, frekvensstep 9 kHz

4 Status over software-version

- Sæt Beomasteren i »TESTMODE«.
- Tryk [4].

Display: X, Y = En talværdi (f.eks. 0,4), som angiver hvilken software-version (4IC4), apparatet indeholder.

5 ROM/RAM-test

Testfunktion 5 tester ROM (4IC4), intern RAM 64IC1) og NV-RAM (4IC2). I NV-RAM testes tillige, om hardware-uret er korrekt initialiseret.

- Sæt Beomasteren i »TESTMODE«.
- Tryk [5].

Display: X, Y = Efter ca. 30 sek. vises en talværdi (f.eks. 1,7), som angiver resultatet af testen:

3 Status of tuner model

- Set the Beomaster into "TESTMODE".
- Press [3].

Display: 0 = Europe (types 2336, 2337)
- FM 87.5 – 108 MHz, deemphasis 50 µS
- AM 150 – 350 kHz, 520 – 1610 kHz, frequency step 9 kHz

1 = USA, Canada (type 2338)
- FM 87.5 – 108 MHz, deemphasis 75 µS
- AM 520 – 1610 kHz, frequency step 10 kHz

2 = Japan (type 2339)
- FM 76 – 90 MHz, deemphasis 50 µS
- AM 520 – 1610 kHz, frequency step 9 kHz

3 = Australia (type 2340)
- FM 87.5 – 108 MHz, deemphasis 50 µS
- AM 520 – 1610 kHz, frequency step 9 kHz

4 Status of software version

- Set the Beomaster into "TESTMODE".
- Press [4].

Display: X, Y = A numerical value (e.g. 0.4) indicates which software version (4IC4) the product contains.

5 ROM/RAM test

Test function 5 tests the ROM (4IC4), the internal RAM (4IC1) and the NV-RAM (4IC2). In NV-RAM the correct initialization of the hardware watch is also tested.

- Set the Beomaster into "TESTMODE".
- Press [5].

Display: X, Y = After about 30 sec., a numerical value is displayed (e.g. 1,7) that indicates the result of the test:

X	Y	NV-RAM watch	ROM	Int. RAM	NV-RAM
1		ok			
0		error			
	7		ok	ok	ok
	6		ok	ok	error
	5		ok	error	ok
	4		ok	error	error
	3		error	ok	ok
	2		error	ok	error
	1		error	error	ok
	0		error	error	error

Udfør testfunktion 16 og 7 i den nævnte rækkefølge, ved udskiftning af NV-RAM (4IC2).

Carry out test functions 16 and 7 in this sequence when replacing the NV-RAM (4IC2).

6 LED-test
Alle LED's tændes i 6 sek.

- Sæt Beomasteren i »TESTMODE«.
- Tryk [6].

7 Sletning af RAM
Ved sletning af RAM nulstilles NV-RAM:

a) Indlæste AM/FM programmer slettes.
b) »Balance«, »bass«, »treble« og »loudness« bliver sat i 'neutral'.
c) »Volume« bliver sat til '26'.
d) »Option« bliver sat til '1'.
e) Hardware-ur bliver sat til '890101'.

- Sæt Beomasteren i »TESTMODE«.
- Tryk [7].

Efter ca. 6 sek. vises resultatet af testen.

13 IR-sender
Testfunktion 13 sender kontinuert på IR.

- Sæt Beomasteren i »TESTMODE«.
- Tryk [13].

Display: 13

16 Sletning af AM/FM offset-værdi
Testfunktion 16 sletter AM/FM offset bytes i NV-RAM.

- Sæt Beomasteren i »TESTMODE«.
- Tryk [16].

FM-displayindikering:
Skal udføres ved udskiftning af båndpasfilterne 1BP1, 1BP2 og 1BP3 eller PCB01.

Tast	[STAND BY]
Tast	[RADIO]
Tast	[GO TO]
Tast (til MCP indikerer 87,5)	[TURN]

6 LED test
All LED's will be lit for 6 sec.

- Set the Beomaster into "TESTMODE".
- Press [6].

7 Erasure of RAM
The NV-RAM is reset when the RAM i erased:

a) Store AM/FM programmes are erased.
b) "Balance", "bass", "treble" and "loudness" are brought into "neutral".
c) "Volume" is set to "26".
d) "Option" is set to "1".
e) Hardware watch is set to "890101".

- Set the Beomaster into "TESTMODE".
- Press [7].

After about 6 sec., the result of the test is displayed.

13 IR transmitter
Test function 13 is transmitting continuously on IR.

- Set the Beomaster into "TESTMODE".
- Press [13].

Display: 13

16 Erasure of AM/FM offset value
Test function 16 erases the AM/FM offset bytes in the NV-RAM.

- Set the Beomaster into "TESTMODE".
- Press [16].

FM display indication:
This test should be carried out in connection with replacement of the band-pass filters 1BP1, 1BP2 and 1BP3, or PCB01.

Press	[STAND BY]
Press	[RADIO]
Press	[GO TO]
Press (until MCP indicates 87.5)	[TURN]

Indstil på en station hvor du kender den nøjagtige frekvens — < STEP eller STEP >
Kontrollere at — LOCKED lyser

Kortslut (2 gange kortvarigt) — 4TP1

Tast — GO TO

Indtast den nøjagtige frekvens (eks. 98,5MHz) — 9 8 5

Tast (inden 3 sec.) — STORE

Display: 4 Indstillet korrekt; 5 Frekvens kan ikke indlæses.

Tune in to a station for which you know the exact frequency — < STEP or STEP >

Check that — LOCKED is lit

Short-circuit (twice briefly) — 4TP1

Press — GO TO

Enter the exact frequency (e.g., 98.5MHz) — 9 8 5

Press (within 3 sec.) — STORE

Display: 4 Set correctly; 5 Frequency input not possible

AM-displayindikering:
Skal gennemføres, hvis det keramiske filter 1BP4 eller PCB01 udskiftes.

Tast — STAND BY

Tast — RADIO

Tast — GO TO

Tast (til MCP indikerer 150) — TURN

Kortslut (2 gange kortvarigt) — 4TP1

Tast — GO TO

*Indtast frekvens 455 kHz. — 4 5 5

Tast (inden 3 sec.) — STORE

Display: 4 Indstillet korrekt; 5 Frekvens kan ikke indlæses.

* Ved udskiftning af 1BP4 indtastes den frekvens der står på det nye filter.

AM display indication:
This test should be carried out in connection with replacement of the band-pass filter 1BP4 or PCB01.

Press — STAND BY

Press — RADIO

Press — GO TO

Press (until MCP indicates 150) — TURN

Short-circuit (twice briefly) — 4TP1

Press — GO TO

*Enter frequency 455 kHz — 4 5 5

Press (within 3 sec.) — STORE

Display: 4 Set correctly; 5 Frequency input not possible

* When replacing 1BP4, enter the frequency stated on the new ceramic filter.

Omstilling mellem HF varianter

På diagram A i nederste højre hjørne er vist forskellige koblingsmåder mellem HF varianter. De forskellige koblingsmåder gør, at mikrocomputeren softwaremæssigt kan »se« forskel på varianterne.

Forbindelse A-A: USA og Canada (type 2338). Søgning på AM i 10 kHz trin, ingen langbølge.

Forbindelse B-B: Japan (type 2339). Søgning på AM i 9 kHz trin, ingen langbølge. FM frekvensområde 76-90 MHz (kræver speciel FM tuner, bestillingsnr. 8050102)

Forbindelse C-C: Australien (type 2340). Søgning på AM i 9 kHz trin, ingen langbølge.

Switching between RF variants

Different ways of switching between RF variants are showed in the lower right corner of diagram A. As to the software the different ways of switching enables the microcomputer to "see" the difference between the variants.

Connection A-A: USA and Canada (type 2338). Searching on AM in steps of 10 kHz, no long wave.

Connection B-B: Japan (type 2339). Searching on AM in steps of 9 kHz, no long wave. FM frequency range 76-90 MHz (demands a special FM tuner, part no. 8050102).

Connection C-C: Australia (type 2340). Searching on AM in steps of 9 kHz, no long wave.

ISOLATIONSTEST

Ethvert apparat **skal** isolationstestes efter at det har været adskilt. Testen udføres når apparatet igen er helt samlet og klar til udlevering til kunden.

Isolationstest for Beomaster 6500

Isolationstesten udføres på følgende måde:
De to stikben på netstikket kortsluttes og tilsluttes en af terminalerne på isolationstesteren. Den anden terminal fra isolationstesteren tilsluttes stelbenet i hovedtelefonstikdåsen.

OBS!
For at undgå beskadigelser på apparatet er det vigtigt, at begge terminaler fra isolationstesteren har virkelig god mekanisk kontakt.

Der drejes nu langsomt med spændingsreguleringen på isolationstesteren indtil en spænding på 1,5 - 2 kV er opnået. Her skal den holdes i 1 sekund, derefter drejes der langsomt ned for spændingen igen.

Der må ikke på noget tidspunkt under testen forekomme overslag.

INSULATION TEST

Each set **must** be insulation tested after dismantling. The test is to be performed when the set has been re-assembeld and is ready for delivery to the customer.

Insulation test for Beomaster 6500

Make the insulation test as follows: Short-circuit the two plug pins of the mains plug and connect one of the terminals of the insulation tester. Connect the other terminal of the insulation tester to the chassis pin of the headphone socket.

N.B.!
To avoid ruining the set, it is essential that both insulator test terminals are in really good mechanical contact.

Now turn slowly the voltage control of the insulation tester until a voltage of 1.5 - 2 kV is obtained. Hold it there for 1 second, then turn slowly the voltage down again.

At no point during the testing procedure any flash-overs are permissible.

SLUTAFPRØVNING MCP

Denne afprøvning sikrer at hovedparten af MCPens elektriske funktioner er i orden.

TAST/BETJENING	DISPLAY (Kun test displays er nævnt)
Tilslut Beomaster 6500 til lysnet	St.By diode på Beomaster skal lyse
Placer MCPen foran Beomasteren, så de kan kommunikere sammen.	
Tryk [RADIO]	RADIO og AM/FM – 150/87.4 skal lyse
Tryk [STATUS]	Volumeskala og frekvensudlæsning i cifferdisplay skal vises. AM eller FM skal lyse.
Drej min. max.	Ved max. volume skal alle dioder i volumeskala lyse. RADIO og AM/FM – 150/87.4 skal lyse
Tryk [GO TO]	RADIO, AM/FM – 150/87.4 og MANUAL skal lyse
Tryk [TAPE 2]	TAPE 2 skal lyse
Tryk [CONTROL]	CONTROL skal lyse
Afbryd Beomaster 6500 fra lysnettet	
Tryk [STATUS]	NO CONTACT skal lyse

FINAL TESTING MCP

This test ensures that most of the MCP's electrical functions are in order.

KEY/OPERATION	DISPLAY (Test displays mentioned only)
Connect Beomaster 6500 to mains	St.BY. LED on the Beomaster should be on
Place the MCP in front of the Beomaster to allow them to communicate	
Press [RADIO]	RADIO and AM/FM – 150/87.4 should be on
Press [STATUS]	Volume dial and frequency read-out in digit display should be shown. AM or FM should be on.
Turn min. max.	When at maximum volume, all LED's in the volume dial should be on. RADIO and AM/FM – 150/87.4 should be on.
Press [GO TO]	RADIO, AM/FM – 150/87.4 and MANUAL should be on
Press [TAPE 2]	TAPE 2 should be on
Press [CONTROL]	CONTROL should be on
Disconnect the Beomaster 6500 from mains	
Press [STATUS]	NO CONTACT should be on

Bang&Olufsen

Beomaster 7000

Type 2341, 2342, 2343, 2344, 2345

Beomaster 6500

Corrections

10-91 3538794

Indklæbes i Serviceanvisningen Beomaster 6500 (3538751)
Paste into Service Manual Beomaster 6500 (3538751)
In Serviceanleitung Beomaster 6500 (3538752) einkleben
A coller le Manuel d'entretien pour Beomaster 6500 (3538752)

Bang&Olufsen

INDHOLD

Transformer forbindelser 10
Diagrammer 11
SMD Komponentplacering 11-4
Elektrisk stykliste 12
Mekanisk stykliste 13
Justeringer 14
Corrections f. Beomaster 6500 15

CONTENTS

Wiring of transformer 10
Diagrams 11
SMD components 11-4
List of electrical parts 12
List of mechanical parts 13
Adjustments 14
Corrections f. Beomaster 6500 15

INHALT

Transformator-Verbindungen 10
Schaltbilder 11
Printzeichnungen über SMD 11-4
Elektrische Stückliste 12
Mechanische Stückliste 13
Einstellungen 14
Corrections f. Beomaster 6500 15

TABLE DES MATIERES

Connexions transformateur 10
Schémas 11
Schémas des cartes imprimées - CMS 11-4
Liste des composants 12
Liste des pièces détachées mécaniques 13
Réglages 14
Corrections f. Beomaster 6500 15

1 AM-FM tuner and IF ..... diagr. A page 11-1

2 Output and Power Supply ..... diagr. B page 2-4

3 Preamplifier ..... diagr. B page 2-4

4 Microcomputer ..... diagr. C page 11-3

5 Speaker sockets ..... diagr. B page 2-4

6 Fan regulation ..... diagr. B page 2-4

7 Relay ..... diagr. B page 2-4

9 Display ..... diagr. C page 11-3

10 Radio Data System ..... diagr. E page 11-4

17 Tuner - FM ..... diagr. page 1-7

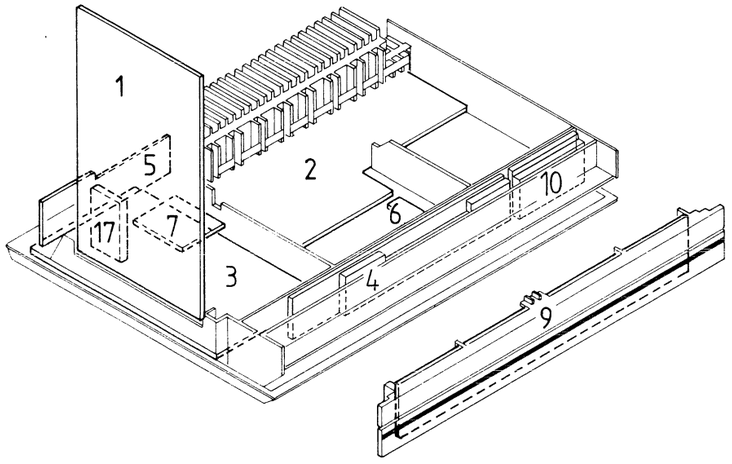

10-1

EXPLANATION DE SYMBOLES DU FUSSIBLE UTILISES DANS L'APPAREIL

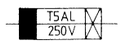

Remplacer par un fusible retardé de la même type et de 5 amperes 250 volts.

EXPLANATION OF THE FUSE SYMBOLS USED IN THE SET

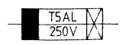

Replace with the same type of 5 amperes 250 volts slow acting fuse.

Connection of Mains Transformer

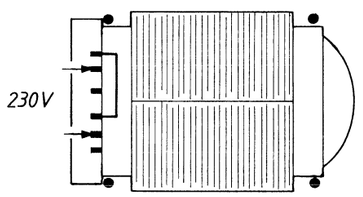

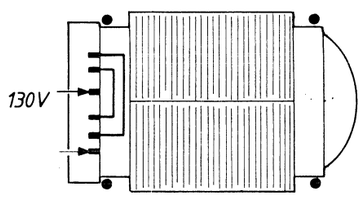

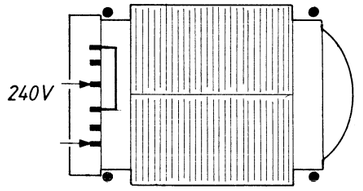

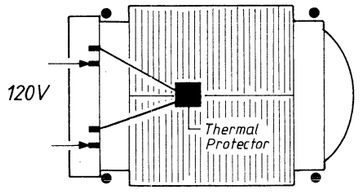

8013363 for type 2343

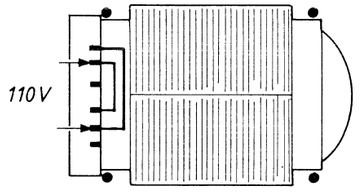

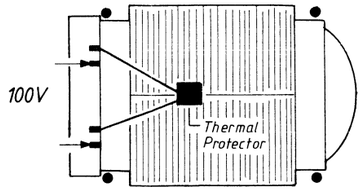

8013364 for type 2344

DIAGRAM A AM-FM, TUNER, IF, STEREO DECODER (Type 2341, 2342)

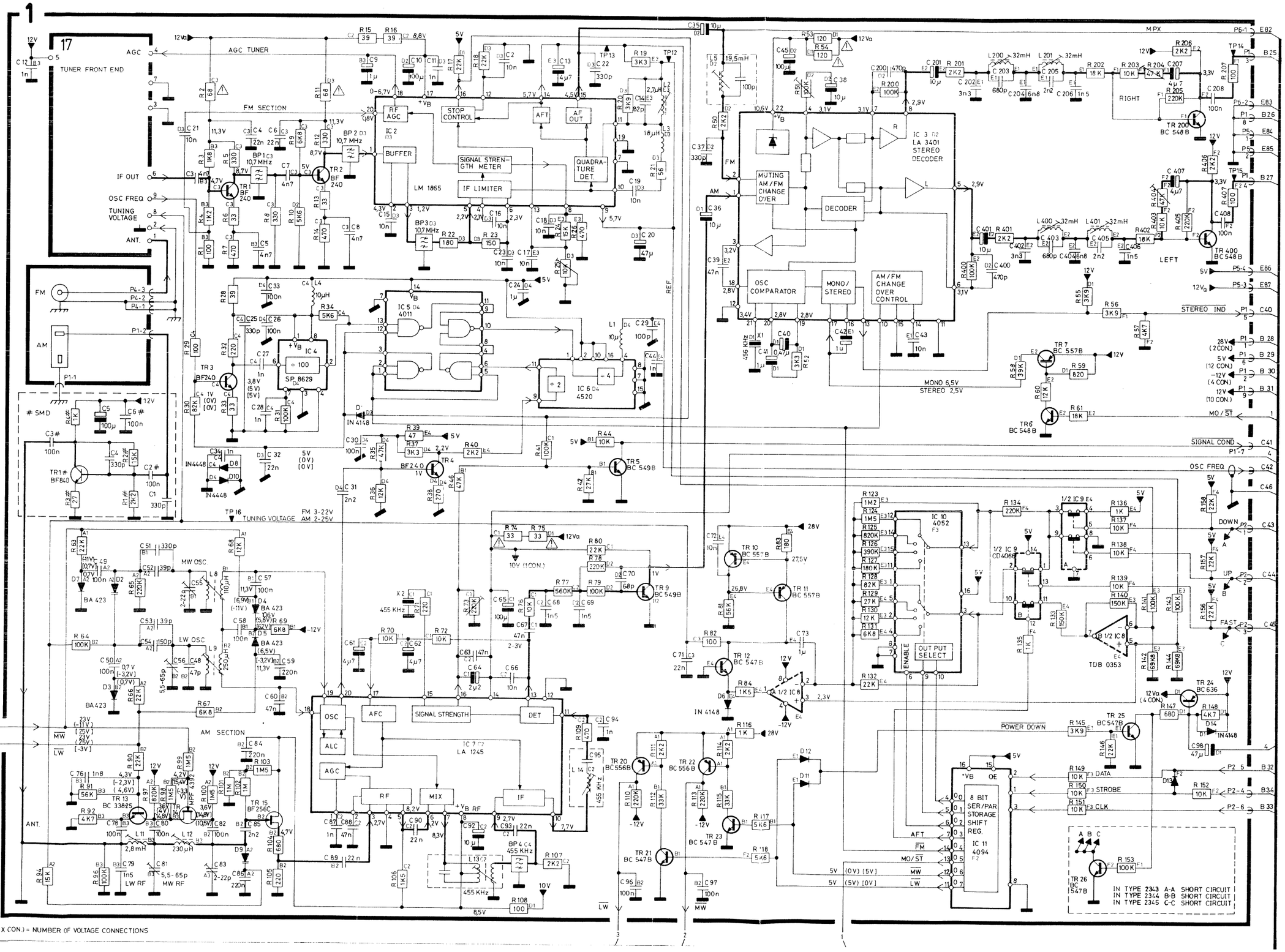

DIAGRAM A AM-FM, TUNER, IF, STEREO DECODER (Type 2343, 2344, 2345)

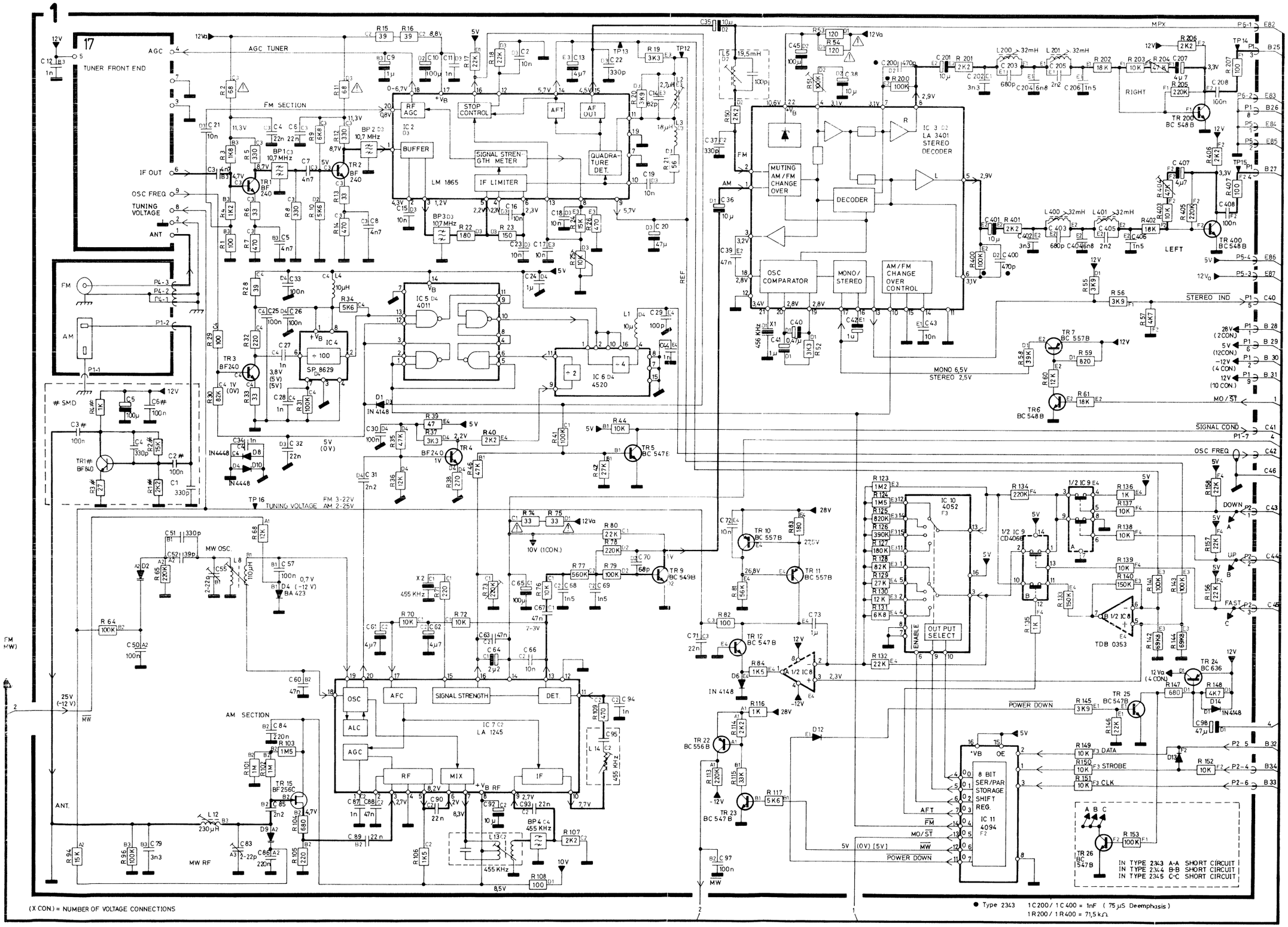

DIAGRAM C MICROCOMPUTER, IR TRANSCEIVER, DISPLAY

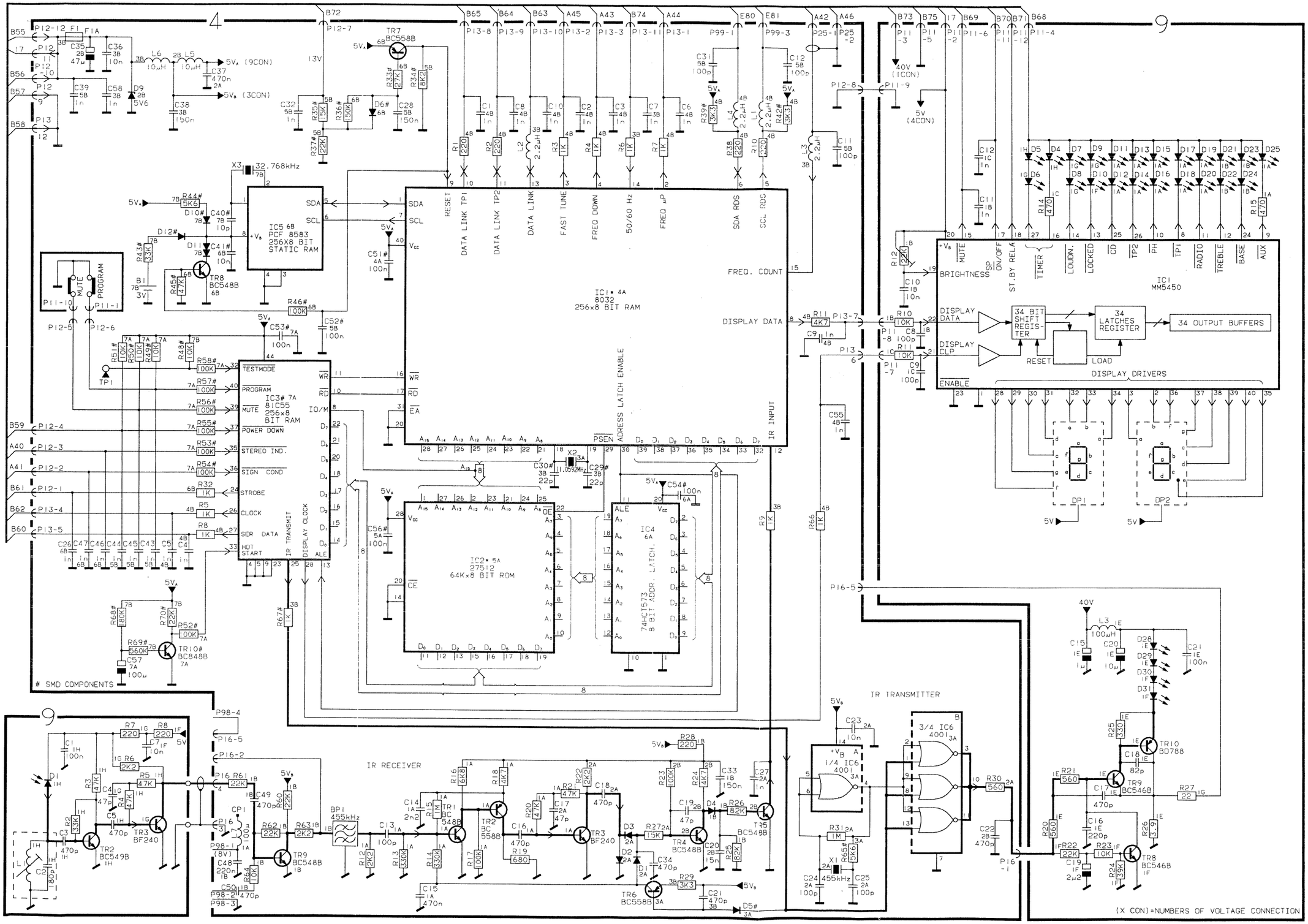

DIAGRAM E RADIO DATA SYSTEM

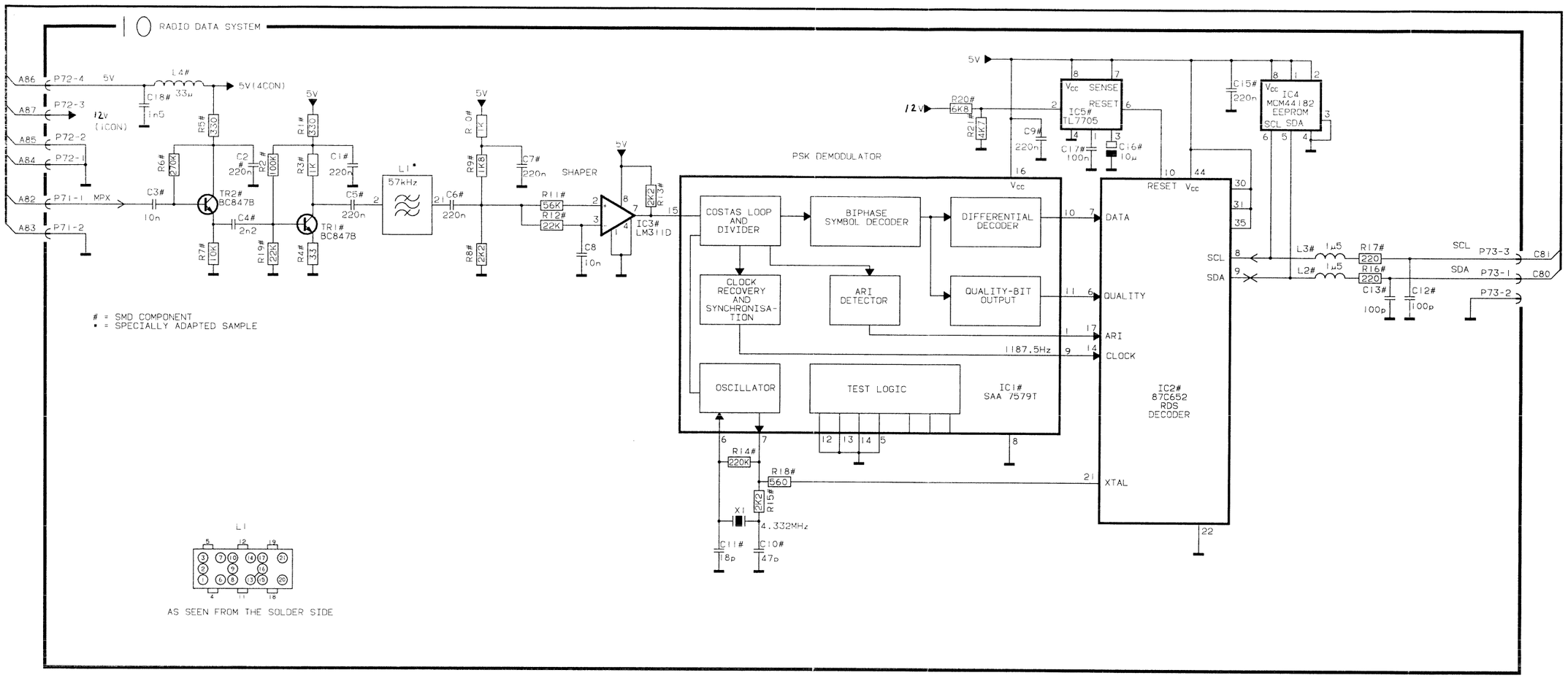

SMD Survey

: rear side

: rear side

PCB 1, Amp. f. AM loop antenna

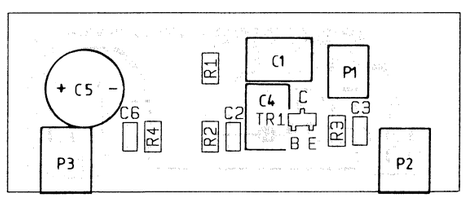

PCB 10, RDS

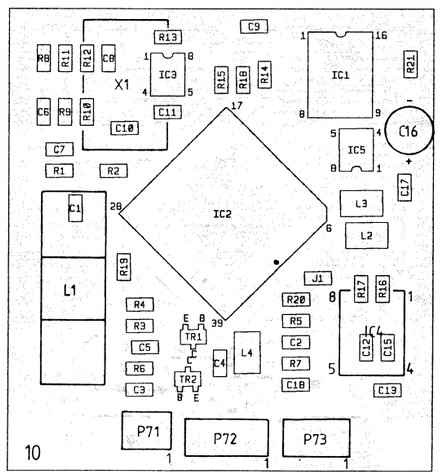

SMD Survey

: rear side

: rear side

PCB 4, Microcomputer

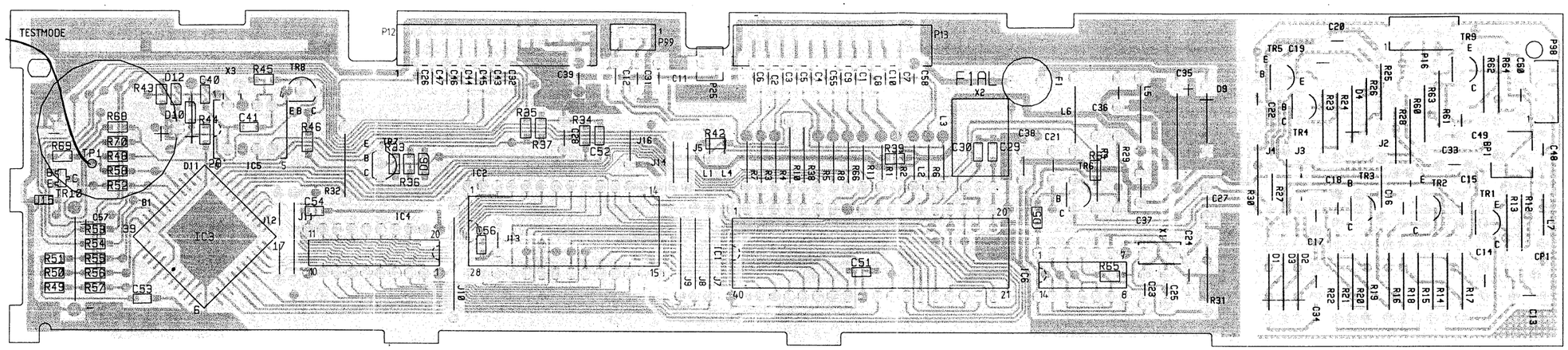

PCB 4, Microcomputer PCB D version

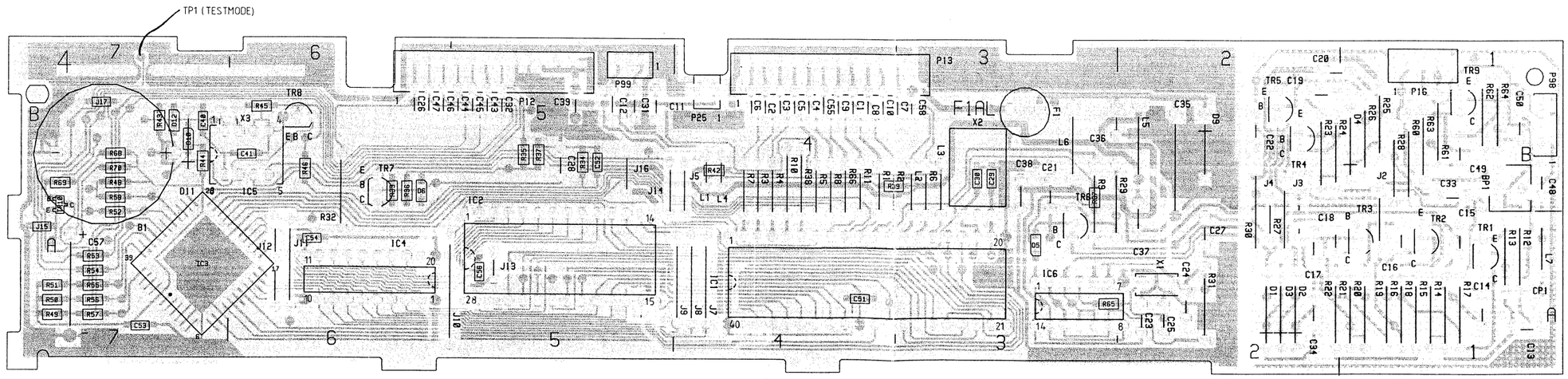

LIST OF ELECTRICAL PARTS

19	20	51	103	125	136	152	209
							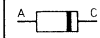

250							

Resistors not referred to are standard, see page 3-8

△ indicates that static electricity may destroy the component.

PCB 1,
3001504 RF, type 2341, 2342
3001510 RF, type 2343, 2345
3001513 RF, type 2344
3001499 Amp. f. AM loop antenna, all types

J34	5020449	1.5Ω 10% 0.3W			
C52-C53	4000193	47pF 5% 63V	C73	4130136	1µF 20% 100V
P5	7220711	Plug 4 pole	P6	7220709	Plug 2 pole
	6275679	Wire bundle HF-Prescaler			

PCB 4,8001454
Microcomputer

IC1△	8341069	**136** 8032	IC4△	8340777	**136** 74HCT573
IC2△	8341775	**125** Eprom	IC5△	8341105	**103** PCF8583
	7200056	Socket 28 pole	IC6△	8340373	**136** 4001B
IC3△	8341216	**152** 81C55			

TR1	8320509	**020** BC548B	TR6-TR7	8320510	**020** BC558B
TR2	8320510	**020** BC558B	TR8	8320509	**020** BC548B
TR3	8320625	**019** BF240	TR9	8320108	**020** BC548B
TR4-TR5	8320509	**020** BC548B	TR10	8320615	**051** BC848B

D1-D4	8300058	**209** 1N 4148	D9	8300128	**209** Z 5.6V 5% 0.4W
			D10	8300482	**250** 4148
D5-D6	8300482	**250** 4148	D11	8300056	**209** Z 1.5V 10% 0.2W
			D12	8300482	**250** 4148

C1-C10	4010035	1nF 10% 63V	C31	4000438	100pF 5% 63V
			C32	4010035	1nF 10% 63V
C11-C12	4000438	100pF 5% 63V	C33	4130307	150nF 10% 63V
			C34	4010128	470pF 10% 50V
C13	4000204	100pF 5% 63V	C35	4200364	47µF -20+50% 10V
C14	4010103	2.2nF 10% 50V	C36	4010106	10nF -20+80% 40V
C15	4130313	470nF 20% 63V	C37	4130313	470nF 20% 63V
C16	4010128	470pF 10% 50V	C38	4130307	150nF 10% 63V
C17	4000193	47pF 5% 63V	C39	4010035	1nF 10% 63V
C18	4010128	470pF 10% 50V	C40	4000232	10pF ±0.5pF 50V
C19	4000193	47pF 5% 63V	C41	4010157	10nF 10% 50V
C20	4130315	15nF 5% 63V	C43-C47	4010035	1nF 10% 63V
C21-C22	4010128	470pF 10% 50V			
			C48	4130226	220nF 10% 63V
C23	4010106	10nF -20+80% 40V	C49-C50	4010128	470pF 10% 50V
C24-C25	4000204	100pF 5% 63V			
			C51-C54	4010166	100nF -20+80% 50V
C26	4010035	1nF 10% 63V			
C27	4010105	1nF 10% 50V	C55	4010035	1nF 10% 63V
C28	4130307	150nF 10% 63V	C56	4010166	100nF -20+80% 50V
C29-C30	4000261	22pF 5% 50V	C57	4200539	100µF 20% 10V
			C58	4010035	1nF 10% 63V

L1-L4	8020565	Coil 2.2µH	L5-L6	8020342	Coil 10µH
			L7	8020621	Coil 100µH

51	103	138	150	152			
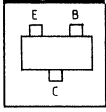							

Resistors not referred to are standard, see page 3-8

△ indicates that static electricity may destroy the component.

BP1	8030056	Crystal 455kHz ±1kHz			
X1	8030024	Crystal 455kHz ±1kHz	X2	8090078	Crystal 32.768kHz
X2	8090104	Crystal 11.0592MHz			
B1	8700027	Lithium battery (Carry out test function 16 and 7 when replacing (see page 7-6))			
F1	6604009	Fuse 1AF 250V			
P12-P13	7220554	Plug 12 pole	P25	7220176	Plug 2 pole
			P98	7220565	Plug 4 pole
P16	7220585	Plug 5 pole	P99	7220710	Plug 3 pole

PCB 10, 8001523
Radio Data System

IC1△	8341453	**138** SAF7579T	IC4△	8341439	**103** MCM44182
IC2△	8341578	**152** 80C31	IC5△	8341612	**150** TL7705
IC3△	8341600	**150** LM311			
TR1-TR2	8320755	**051** BC847B			
C1-C2	4000287	220nF -20+80% 25V	C10	4000234	47pF 5% 50V
			C11	4000276	18pF 5% 50V
C3	4010157	10nF 10% 50V	C12-C13	4000241	100pF 5% 50V
C4	4010170	2.2nF 10% 50V			
C5-C7	4000287	220nF -20+80% 25V	C15	4000287	220nF -20+80% 25V
			C16	4000826	10µF -20+80% 16V
C8	4010176	10nF -20+80% 50V	C17	4010166	100nF -20+80% 50V
C9	4000287	220nF -20+80% 25V	C18	4000351	1.5nF 5% 50V

All other Electrical Parts are identical with BM 6500, chapter 3.

LIST OF MECHANICAL PARTS
Exp. view see page 4-1
and page 4-2

01 modul	8001504	PCB RF, type 2341, 2342
	8001510	PCB RF, type 2343, 2345
	8001513	PCB RF, type 2344
	8001499	PCB Amp. f. AM loop antenna, all types
04 modul	8001454	Microcomputer
	3302355	Lid
10 modul	8001523	PCB RDS (see drawing on page 10-1)
	3162339	Lid
	6276562	Wire, schielded, 2 pole
	6276563	Wire with 3 pole plug
	6276564	Wire with 4 pole plug
17 modul	8050093	Tuner FM
	8050102	Tuner FM, type 2344
9220	2569021	Rail
	2569022	Rail, white
92T1	8013491	Transformer, type 2341
	8013499	Transformer, type 2342
	8013363	Transformer, type 2343
	8013364	Transformer, type 2344
	8013500	Transformer, type 2345
	6275740	Main wire bundle

Parts not shown

3501267	Users Guide, Beosystem 7000 DK
3501267	Users Guide, Beosystem 7000 DK
3501268	Users Guide, Beosystem 7000 S
3501269	Users Guide, Beosystem 7000 SF
3501270	Users Guide, Beosystem 7000 GB
3501271	Users Guide, Beosystem 7000 D
3501272	Users Guide, Beosystem 7000 NL
3501273	Users Guide, Beosystem 7000 F
3501274	Users Guide, Beosystem 7000 I
3501275	Users Guide, Beosystem 7000 E
3502842	Setting up Guide, Beomaster 7000 DK
3502843	Setting up Guide, Beomaster 7000 S
3502844	Setting up Guide, Beomaster 7000 SF
3502845	Setting up Guide, Beomaster 7000 GB
3502846	Setting up Guide, Beomaster 7000 D
3502847	Setting up Guide, Beomaster 7000 NL
3502848	Setting up Guide, Beomaster 7000 F
3502849	Setting up Guide, Beomaster 7000 I
3502850	Setting up Guide, Beomaster 7000 E
3502851	Setting up Guide, Beomaster 7000 USA
3502852	Setting up Guide, Beomaster 7000 CDN

All other Mechanical Parts are identical with BM 6500, chapter 4.

TESTMODE

Bring Beomaster 7000 i »TESTMODE« på følgende måde:

- Tast RADIO
- Kortslut 4TP1 kortvarigt til stel (Se SMD diagram)

Vælg mellem testprocedurerne side 7-4 ved at sende de tilhørende cifferkomandoer fra en Beolink terminal.

5 ROM/RAM-test (Beomaster 7000)

Testfunktion 5 tester ROM (4IC2), intern RAM (4IC1), extern RAM (4IC3) og NV-RAM (4IC5). I NV-RAM testes tillige om hardware-uret er korrekt initialiseret.

- Sæt Beomasteren i »TESTMODE«
- Tryk [5]

Display: X,Y = Efter ca. 4 sek. vises en talværdi som viser resultatet af testen (alt OK = 3.7):

TESTMODE

Bring the Beomaster 7000 into »TESTMODE« in the following way:

- Press RADIO
- Short-circuit 4TP1 (briefly) (See SMD components)

It is now possible to choose among the test procedures mentioned on page 7-4 by transmitting the relevant digital commands from a Beolink terminal.

5 ROM/RAM test (Beomaster 7000)

Test function 5 tests the ROM (4IC2), the internal RAM (4IC1), the external RAM (4IC3) and the NV-RAM (4IC5). In NV-RAM the correct initialization of the hardware-clock is also tested.

- Bring the Beomaster 7000 into »TESTMODE«.
- Press [5]

Display: X,Y = After about 4 sec. a numerical value is displayed (3.7 = everything OK) that indicates the result of the test:

X	Y	NV-RAM	NV-RAM watch	ROM	int. RAM	ext. RAM
3		OK	OK			
2		OK	not initialized			
1		error	OK			
0		error	not initialized			
	7			OK	OK	OK
	6			OK	OK	error
	5			OK	error	OK
	4			OK	error	error
	3			error	OK	OK
	2			error	OK	error
	1			error	error	OK
	0			error	error	error

Udfør testfunktion 16 og 7 i nævnte rækkefølge ved udskiftning af NV-RAM (4IC5).

Carry out test functions 16 and 7 in this sequence when replacing the NV-RAM (4IC5)

TESTMODE

Den Beomaster 7000 folgendermaßen in die Betriebsart »TESTMODE« bringen:

- RADIO tasten
- 4TP1 (kurzzeitig) kurzschließen (Seite 11-5)

Durch Eingabe der den jeweiligen Testfunktionen zugeordneten Ziffernbefehle an einer Beolink Fernbedienung kann jetzt zwischen den auf Seite 7-4 erwähnten Testverfahren gewählt werden.

5 ROM/RAM-Test (Beomaster 7000)

Testfunktion 5 testet das ROM (4IC2), das interne RAM (4IC1), das externe RAM (4IC3) und das NV-RAM (4IC5). Im NV-RAM wird zugleich getestet, ob die Hardware-Zeituhr korrekt initialisiert worden ist.

- Den Beomaster in die Betriebsart »TESTMODE« bringen
- Danach [5] tasten

Display: X,Y = Nach ca. 4 Sekunden wird ein Wert angezeigt (3.7 = OK) welcher das Testergebnis angibt:

MODE D'ESSAI

Amener le Beomaster 7000 en mode »TESTMODE« en procédant comme suit:

- Appuyer sur RADIO
- Court-circuiter brièvement 4TP1 à la masse (page 11-5)

Sélectionner une procédure d'essai (page 7-4) en envoyant depuis un terminal Beolink les numéros de commandement correspondants.

Essai 5 ROM/RAM (Beomaster 7000)

La fonction d'essai 5 contrôle la ROM (4IC2), la RAM interne (4IC1), la RAM externe (4IC3) et la RAM rémanente (4IC5). Le contrôle de la RAM rémanente associe également une vérification de l'initialisation de l'horloge appariée au matériel.

- Amener le Beomaster en mode »TESTMODE«.
- Appuyer sur [5]

Affichage: X,Y = un chiffre apparait au bout de 4 secondes environ. Il visualise le résultat de l'essai (OK = 3.7):

X	Y	NV-RAM	NV-RAM watch	ROM	int. RAM	ext. RAM
3		OK	OK			
2		OK	not initialized			
1		error	OK			
0		error	not initialized			
	7			OK	OK	OK
	6			OK	OK	error
	5			OK	error	OK
	4			OK	error	error
	3			error	OK	OK
	2			error	OK	error
	1			error	error	OK
	0			error	error	error

Beim Austauschen des NV-RAM's (4IC5) sind die Testfunktionen 16 und 7 in der genannten Reihenfolge durchzuführen.

Lors du remplacement de la RAM rémanente (4IC5), effectuer les essais 16 et 7 dans l'ordre indiqué.

Bang&Olufsen

Corrections for Beomaster 6500

DIAGRAMS

Page 2-4:

2R18 must be 5020881 22Ω 5% 1/4W

An kondensator part no. 4200510 10µ 20% 16V has been added to the collector on 2TR16.

3R81 and 3R84 5010092 220Ω 5% 1/4W has been added:

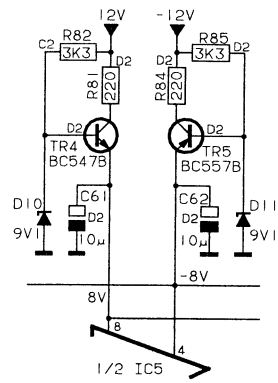

7TR2 BC338 is an NPN transistor. Emitter to the ground.

Page 2-5:

Connection to pin 7 (TEST) on 4IC2 is deleted.

The value of 4X1 is 11.0592MHz

Part no. on 4IC1* must be 8341069

Part no. on 4IC4* must be 8341309

Part no. on PCB 9 must be 8001284

List of Electrical Parts page 3-3

2C6, 2C7 must be 4200530 10000µF 20% 50V

2RL6 is named wrong. 2RL1 is correct

List of Mechanical Parts page 4-3

12 Modul part no. must be 8002821

9504	2804055 Wheel
9510	2854128 Arm
9511	2576050 Spacer

Accessories page 4-4

8087016 IR-sensor kit